

PH600 series high performance electro-hydraulic servo drive

Instruction Manual

Ningbo Physis Technology Co., Ltd.
www.physis.com.cn

Version change history

Date of revision	What's Changed
2024-05	Catalog page number adjustment, brake unit specification resistance value optional table power modification (40Ω 500W to 40Ω 1000W,15Ω 500W to 15Ω 1500W), motor model list update, correct some errors and so on

Preface

Thank you for choosing our PH600 series high performance electro-hydraulic servo driver.

Designed for hydraulic equipment such as injection molding machine, die-casting machine, and hydraulic press, the servo system features energy saving, high accuracy, high efficiency and durability for adopting high performance vector control. The drive has rich external expansion and CAN communication interfaces, helping to form a multi-pump parallel system to realize the hydraulic control on large flow equipment.

If you use the drive for the first time, please read this manual carefully to ensure correct and safe operation. Please keep this manual in a safe place so that it can be consulted at any time.

We are committed to the continuous product improvement and upgrade. The background software and product information will be updated accordingly.

The target audiences of the manual include:

- Control system designer
- Installation or wiring personnel
- User or maintenance personnel

Please make sure to observe the following:

- The installation environment must be free of water vapor, corrosive gases, or combustible gases.
- Do not connect the grid power directly to the U, V and W terminals of the motor when wiring. Otherwise, incorrect connection will cause drive or motor damage.
- Ground wires must be grounded safely.
- Do not disassemble the drive, motor, oil pump, or change the wiring while the power is on.
- Do not touch the heat sink at work to avoid burns.

We provide all-round after-sales and maintenance services. Do not disassemble the drive or motor housing unless authorized; any modification on the drive or motor or damage accompanied will revoke the warranty rights; and we will not be liable or responsible for the consequences caused.

If you have any questions during use, please consult the dealer or our customer service center.

Contents

Preface ..... **i**
Contents ..... **ii**
1 Safety precautions **1**
1.1 Safety definition 1
1.2 Safety guidelines 1
2 Product overview **3**
2.1 Product confirmation 3
2.2 Drive nameplate 3
2.3 Drive model description 3
2.4 Drive specifications 4
2.5 Drive technical performance 5
2.6 Dimensions of drive 7
2.6.1 Wall-mounting dimensions 7
2.6.2 Flange mounting dimensions 9
3 Mechanical installation **11**
3.1 Installation environment 11
3.2 Installing the drive 12
3.2.1 Installation direction 12
3.2.2 Installation method 12
3.2.3 Single-unit installation 13
3.2.4 Multiple-unit installation 13
3.3 Disassembling/assembling the junction box of drive 14
4 Electrical connection **15**
4.1 Wiring precautions 15
4.2 Switch, contactor, and cable selection 15
4.3 Terminal layout 16
4.4 Standard wiring 17
4.5 Jumper function 18
4.6 Main circuit wiring 19
4.6.1 Main circuit terminals 19
4.6.2 External HMI terminals and resolver terminals 21
4.6.3 Motor power cable and temperature measuring resistor terminals 22
4.6.4 Motor resolver connection cable and terminals 23
4.6.5 Typical wiring examples of main circuit 23
4.6.6 Wiring procedure for main circuit terminals 24
4.7 Input and output signal wiring 24
4.7.1 Control circuit terminals 24
4.7.2 Typical control signal wiring examples 28

4.8 Control signal interface circuit 28
4.8.1 Analog input circuit 28
4.8.2 Analog output circuit 29
4.8.3 Digital input circuit 29
4.8.4 Digital output circuit 30
4.9 CAN communication card 31
4.10 EtherCAT communication card (EC-TX508) 32
5 Operating through the LED panel 35
5.1 LED keypad introduction 35
5.2 LED panel functions 38
5.2.1 Keypad operation mode 38
5.2.2 Shortcut mode 39
5.2.3 Quick setup mode 39
5.2.4 Monitoring mode 46
5.2.5 Setup mode 48
5.2.6 Debug mode 70
5.2.7 Multi-pump mode 72
6 Commissioning 76
6.1 Pressure control commissioning 76
6.1.1 Flowchart 76
6.1.2 Commissioning procedure 76
6.2 Speed mode commissioning 83
7 Multi-pump combined flow control 84
7.1 Flow distribution method for multi-pump flow combining 84
7.2 Multiple pumps 85
7.3 Hybrid 86
7.4 Multiple modes 87
7.5 Communication with two models 88
7.6 Communication with four models 89
7.7 Multi-pump control mode settings 93
7.7.1 Pump model selection 93
7.7.2 Multi-pump parameter settings 93
7.7.3 Flow calibration 93
8 Troubleshooting 95
8.1 Display list for protection 95
8.2 Fault handling flowcharts 99
8.3 Common faults and solutions 115
9 Maintenance and inspection 117
9.1 Precautions 117
9.2 Check item 117

9.3 Main circuit insulation test 117
9.4 Replacement of wearing parts 118
9.4.1 Service life 118
9.4.2 Replacement 118
10 Accessories 119
10.1 Noise filter model selection 119
10.2 Braking resistor model selection and installation 119
10.3 Pressure sensor model selection 122

1 Safety precautions

Read this manual carefully and follow all safety precautions before moving, installing, operating and servicing the product. Otherwise, equipment damage or physical injury or death may be caused.

We shall not be liable or responsible for any equipment damage or physical injury or death caused due to your or your customers' failure to follow the safety precautions.

1.1 Safety definition

The precautions for safe operation in the manual are classified into "Danger", "Warning" and "Note".

**Danger**: Point out potentially dangerous situations that may result in serious personal injury or death if not operated as required.

**Warning**: Point out potentially dangerous situations that may result in serious personal injury or death if not operated as required.

Note: Point out potentially dangerous situations that may result in moderate personal injury if not operated as required.

1.2 Safety guidelines

**Danger**	1. Only trained and qualified professionals can perform the installation or maintenance.
	2. Do not perform wiring, inspection or component replacement when the power is on. Before wiring or inspection, ensure all the input power supplies have been disconnected, and wait for at least 10 minutes or until the DC bus voltage is lower than 36V.
	3. Please use insulated protective tools for inspection; otherwise, electric shock accident or personal injury may be caused.
	4. Connect the ground wires reliably and ask professionals to performing wiring to avoid electric shock or fire accident.
	5. Do not install the motor, braking resistor, or driver near combustible materials; otherwise, fire may be caused.
	6. Do not modify the product unless authorized; otherwise, electric shock, malfunction, burns, or fire may be caused.
**Warning**	1. Do not hold or pull the aviation plug connector to deliver the motor. Otherwise, the connector may be damaged, which may cause the motor to fall and cause injury.
	2. Do not knock the motor when installing the motor. Otherwise, the precision parts on the shaft may be damaged or the accuracy may be degraded.

	3.	The surface temperature of the motor may reach 100℃ when running continuously at full load. The temperature is within the allowable range of design and can be operated normally, but you must install the motor in a place unaccessible to people and animals to avoid scalding.
	4.	The external braking resistor may rise to a high temperature when the motor is frequently braked, which requires well-ventilated heat dissipation. It is recommended to place the motor outside the control cabinet (such as at the top ventilator outlet) with reliably protection measures. When the motor must be installed inside the cabinet, install it near the top ventilator outlet and away from other components.
	5.	Check all external wiring carefully before first power-on to avoid major accidents caused by incorrect wiring.
	6.	Turn on the motor for the first time with no load if possible, and make ready to turn off it depending on the running conditions.
	7.	Do not close or open the power supply, but enable or disable the setup to start or stop the servo system.
	8.	The product contains electrolytic capacitors, integrated circuits, epoxy boards and other components. Dispose of a scrap product as industrial waste; otherwise, personal injury or environmental pollution may be caused.
Note	1.	Protect the drive against physical shock or vibration during the delivery and installation. Do not carry the drive only by its front cover as the cover may fall off.
	2.	Prevent the screws, cables and other conductive parts from falling into the drive.
	3.	R, S, and T are the power input terminals, while U, V, and W are the output motor-connection terminals. Connect the input power cables and motor cables properly; otherwise, damage to the drive may occur.
	4.	Close the drive front cover or junction box before using the drive; otherwise, electric shock may occur.
	5.	Use proper torque to tighten screws for installation and wiring.
	6.	Do not carry out insulation voltage-endurance test on the drive, or measure the control circuits of the drive with a megohmmeter.

For workplaces where the occasional failure of product could cause a major accident or significant damage, please consider equipment safety separately.

The manufacturer, seller, and service provider shall not be liable or responsible for associated damages and joint liability due to servo system failure.

2 Product overview

2.1 Product confirmation

Check the following after receiving the product.

Item	Remarks
Whether the product you have received is consistent with the purchased model.	Check according to the models on the motor and drive nameplates.
Whether the rotating shaft of the motor runs properly.	The motor is proper if the shaft rotates by hand.
Whether there is damage.	View the entire exterior and check for any damage caused during delivery.
Whether all accessories and documents are included.	Check according to the packing list.

If any problems are found, contact our local dealer or office.

2.2 Drive nameplate

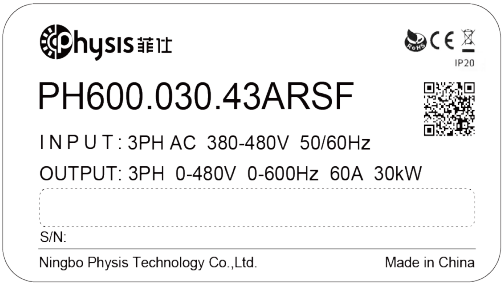

Figure 2-1 Drive nameplate

2.3 Drive model description

PH600	.007	.43	A	R	S	F	-XX
Product category: Electro-hydraulic product series	Power class: 007：7.5KW 011：11KW 015：15KW 018：18.5KW 022：22KW 030：30KW 037：37KW 045：45KW 055：55KW 075：75KW	Voltage class: 23：three-phase 220V 43：three-phase 380V	Version Number: A: No built-in DC reactor (7.5kw-55kw optional) B: built-in DC reactor (75kw-110kw standard)	Encoder type: R：Rotary	Communication mode: S: Standard C: CAN communication E: EtherCAT communication F: PROFINET	Air cooling type F: Air cooling Y：Liquid cooling	Standby: Used to identify the customized machine

PH600	.007	.43	A	R	S	F	-XX
	090：90KW 110：110KW						

2.4 Drive specifications

Drive model	PH600.007.43ARSF	PH600.011.43ARSF	PH600.015.43ARSF	PH600.018.43ARSF	PH600.022.43ARSF
Applicable motor capacity (kW)	7.5	11	15	18	22
Rated output current (Arms)	18.5	25	32	38	45
Overload (Arms) lasts 5min	26	35	48	53	67
Max. output current (Arms) lasts 30s	32.5	40.7	55.2	63.6	81.3
Rated input current (Arms)	25	32	40	47	56
Input power	AC380V(-15%)–440V(+10%) 47Hz–63Hz				
Weight (kg)	4.8	4.8	6.1	6.1	9.5
Recommended regenerative braking resistor specifications	40Ω 1000W		40Ω 1000W		15Ω 1500W
Min. braking resistance (Ω)	31	31	23	23	15

Drive model	PH600.030.43ARSF	PH600.037.43ARSF	PH600.045.43ARSF	PH600.055.43ARSF	PH600.075.43BRSF
Applicable motor capacity (kW)	30	37	45	55	75
Rated output current (Arms)	60	75	92	115	150
Overload (Arms) lasts 5min	99	109	138	167	195
Max. output current (Arms)	113	141	169.7	226	297

Drive model	PH600.030.43ARSF	PH600.037.43ARSF	PH600.045.43ARSF	PH600.055.43ARSF	PH600.075.43BRSF
lasts 30s					
Rated input current (Arms)	70	80	94	128	160
Input power	AC380V(-15%)–440V(+10%) 47Hz–63Hz				
Weight (kg)	14.5	14.5	21	21	27
Recommended regenerative braking resistor specifications	15Ω 1500W	10Ω 2000W	10Ω 2000W	10Ω 2000W	Two 20Ω 2000W resistors in parallel connection
Min. braking resistance (Ω)	11.7		6.4		

Drive model	PH600.090.43BRSF	PH600.110.43BRSF
Applicable motor capacity (kW)	90	110
Rated output current (Arms)	180	215
Overload (Arms) lasts 5min	242	258
Max. output current (Arms) lasts 30s	318	350
Rated input current (Arms)	190	225
Input power	AC380V(-15%)–440V(+10%) 47Hz–63Hz	
Weight (kg)	49	49
Recommended regenerative braking resistor specifications	Two 10Ω 2000W resistors connected in parallel	Two 10Ω 2000W resistors connected in parallel
Min. braking resistance (Ω)	4.4	4.4

2.5 Drive technical performance

Item			Condition
Basic specifications	Control mode		Three-phase full-wave rectification, IGBT with pwm control on sine wave current drive
	Max. output frequency		400Hz
	Motor position sensor		Resolver resolution: 4096pluse/rev
	Environment	Working temperature	-10°C – +50°C (No freezing. Derating is required if the temperature exceeds 40°C.) When the actual ambient temperature of the drive exceeds 40°C, derate the rated output current by 1% for every increase of 1°C. Do not use the drive when the ambient temperature exceeds 50°C.

Item			Condition
			Note: When the drive is built in a cabinet, the ambient temperature is the temperature of air in the cabinet.
		Storage temperature	-30°C – +60°C (No freezing)
		Relative humidity (RH)	Working/storage RH ≤ 90% (no condensation)
		Air	Indoor (no sunlight, corrosive gas, combustible gas, oil mist, or dust)
		Altitude	Below 3000m (Derating is needed when the altitude exceeds 1000m. Derate by 1% for every increase of 100m.)
	Ingress protection (IP) rating		IP20
	Cooling method		Air cooling
	Digital signal	Input	Six inputs. For details, see section 4.7.
		Output	Three outputs. For details, see section 4.7.
	Analog signal	Input	Two (AI1, AI2) 12-bit D/A inputs, 0–10V; one (AI3) 12-bit D/A input, 0–10V/0–20mA
		Output	Two outputs, 10-bit D/A, 0–10V/0–20mA
	Power supply	Output	Used to externally provide 15V reference power supply. Max. output current: 50mA Used to externally provide 24V reference power supply. Max. output current: 100mA
	Communication function		Four types of filed bus available: (Standard) Modbus (Optional) EtherCAT, CANopen, and PROFINET
	LED panel and keypad		Five-digit display, with eight function keys
Control function performance	Process control		Supported input: analog input, internal input, communication input, RS485 continuous input, CANopen input, EtherCAT input, and PROFINET input
	Speed control		Supported control methods: CAN communication, RS485 communication, CANopen input
	Multi-pump parallel control		Able to control 16 pumps in five working modes (multi-pump, hybrid, multi-mode, communication with two models, and communication with four models)
	Pressure control accuracy		±1bar
	Flow control accuracy		±0.5%FS
	Speed control accuracy		±0.5%

Item		Condition
	Pressure control stepped response	≤100ms
	Speed stepped response	≤50ms
	Flow calibration function	Able to calibrate pressure for output flow according to various pump characteristics
	Torque response time	≤2ms
Protection	Hardware	Protection against overcurrent, DC overvoltage, DC undervoltage, braking resistor damage, module overtemperature, pressure sensor fault, FWD/REV overspeed, and brake overload, and so on
	Software	Protection against software faults, task re-entry and so on
	Alarm record memory	Able to store five alarm records
Other	EMC filter	C3: Built-in C3 filters C2: Optional external filters can be used to meet the C2 requirements.
	Warranty period	18-month warranty for 80% load operation
	Certification	Conform to the CE standards

2.6 Dimensions of drive

2.6.1 Wall-mounting dimensions

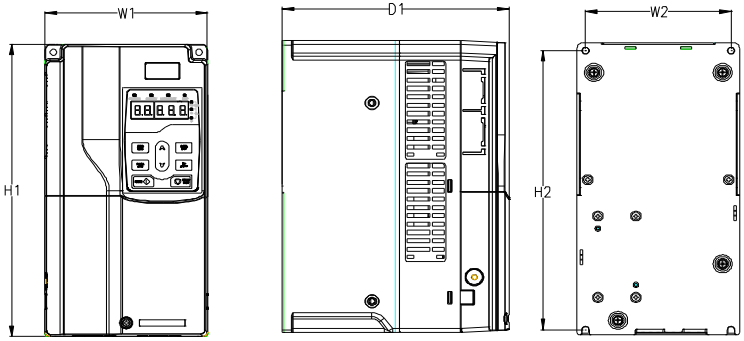

Figure 2-2 Dimensions of PH600.007.43ARSF ~ PH600.037.43ARSF

Table 2-1 Wall-mounting dimensions for PH600.007.43ARSF ~ PH600.037.43ARSF (unit: mm)

Drive model	Outline dimensions (mm)			Mounting hole distance (mm)			Hole diameter	Fixing screw
	W1	H1	D1	H2	W2	D2		
PH600.007.43ARSF	145	280	203	268	130	/	ø6	M5

Drive model	Outline dimensions (mm)			Mounting hole distance (mm)			Hole diameter	Fixing screw
	W1	H1	D1	H2	W2	D2		
PH600.011.43ARSF								
PH600.015.43ARSF	169	320	210	308	154	/	ø6	M5
PH600.018.43ARSF								
PH600.022.43ARSF	200	341	208	328.6	185	/	ø6	M5
PH600.030.43ARSF	250	400	222	380	230	/	ø6	M5
PH600.037.43ARSF								

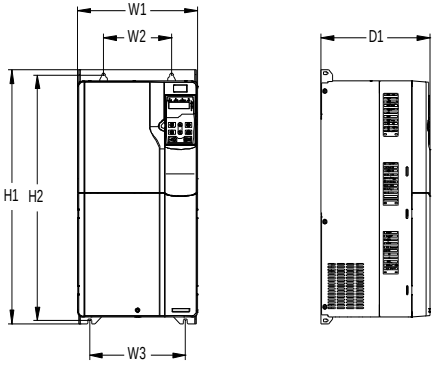

Figure 2-3 Dimensions of PH600.045.43ARSF ~ PH600.075.43BRSF

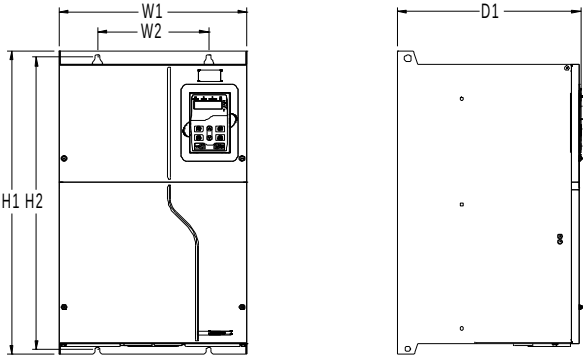

Figure 2-4 Dimensions of PH600.090.43BRSF ~ PH600.110.43BRSF

Table 2-2 Wall-mounting dimensions for PH600.045.43ARSF ~ PH600.110.43BRSF (unit: mm)

Drive model	Outline dimensions (mm)			Mounting hole distance (mm)			Hole diameter	Fixing screw
	W1	H1	D1	H2	W2	W3		
PH600.045.43ARSF	282	560	257	542	160	226	ø9	M8
PH600.055.43ARSF								
PH600.075.43BRSF								
PH600.090.43BRSF	338	554	330	534	200	/	ø9.5	M8
PH600.110.43BRSF								

2.6.2 Flange mounting dimensions

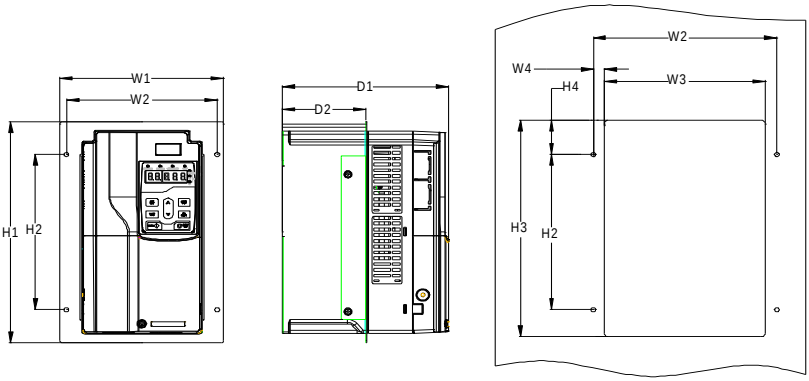

Figure 2-5 Dimensions of PH600.007.43ARSF ~ PH600.018.43ARSF

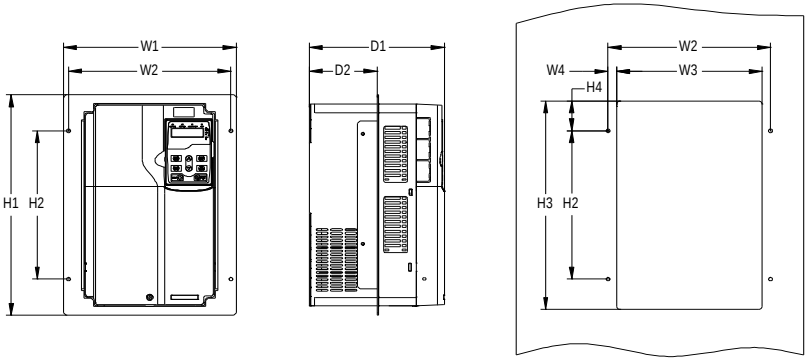

Figure 2-6 Dimensions of PH600.022.43ARSF ~ PH600.075.43BRSF

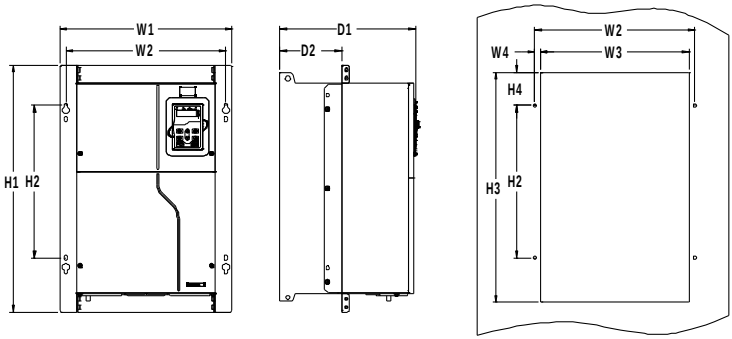

Figure 2-7 Dimensions of PH600.090.43BRSF ~ PH600.110.43BRSF

Table 2-3 Flange mounting dimensions for PH600.007.43ARSF ~ PH600.110.43BRSF (unit: mm)

Drive model	Outline dimensions (mm)			Mounting hole distance (mm)							Hole diameter	Fixing screw
	W1	H1	D1	H2	H3	H4	W2	W3	W4	D2		
PH600.007.43ARSF	200	306	203	215	282	33.5	184	164	10	102	ø6	M5
PH600.011.43ARSF												
PH600.015.43ARSF	224	346	210	255	322	33.5	208	189	9.5	108	ø6	M5
PH600.018.43ARSF												
PH600.022.43ARSF	266	371	208	250	350.6	50.3	250	224	13	104	ø6	M5
PH600.030.43ARSF	316	430	222	300	410	55	300	274	13	118.3	ø6	M5
PH600.037.43ARSF												
PH600.045.43ARSF	352	580	257	400	570	90	332	306	13	134	ø9	M8
PH600.055.43ARSF												
PH600.075.43BRSF												
PH600.090.43BRSF	418.5	600	330	370	559	80.5	389.5	361	14.2	149.5	ø10	M8
PH600.110.43BRSF												

3 Mechanical installation

3.1 Installation environment

The installation environment is essential for the drive to operate with drive performance in the long run. Install the drive in an environment that meets the following requirements.

Environment	Condition
Installation site	Indoor
Ambient temperature	✧ -10–+50.0°C. ✧ When the temperature exceeds 40°C, derate 1% for every increase of 1°C. ✧ Do not use the drive when the ambient temperature exceeds 50°C. ✧ To improve reliability, do not use the drive in the places where the temperature changes rapidly. ✧ When the VFD is used in a closed space, such as control cabinet, use a cooling fan or air conditioner for cooling, preventing the internal temperature from exceeding the temperature required. ✧ When the temperature is too low, if you want to use the VFD that has been idled for a long time, install an external heating device before the use to eliminate the freeze inside the VFD. Otherwise, the VFD may be damaged.
Relative humidity (RH)	✧ Less than 90% ✧ Condensation is not allowed. ✧ The max. RH cannot exceed 60% in the environment where there are corrosive gases.
Storage temperature	-30–+60.0°C.
Running environment	Install the drive in a place: ✧ Away from electromagnetic radiation sources ✧ Away from oil mist, corrosive gases, and combustible gases ✧ Without the chance for foreign objects such as metal powder, dust, oil and water to fall into the drive (do not install the drive onto combustible objects such as wood) ✧ Without radioactive substances and combustible objects ✧ Without hazard gases or liquids ✧ With low salt content ✧ Without direct sunlight
Altitude	✧ Lower than 1000m ✧ When the altitude exceeds 1000m, derate 1% for every increase of 100m. ✧ When the installation site altitude exceeds 3000m, consult the local INVT dealer or office.
Vibration	Max. vibration ACC: 5.8m/s^2 (0.6g)
Installation direction	Install the drive vertically to ensure good heat dissipation performance.

3.2 Installing the drive

3.2.1 Installation direction

The drive can be installed on the wall or in a cabinet.

The drive must be installed vertically. Check the installation position according to following requirements. For details about the outline dimensions, see 2.6 Dimensions of drive.

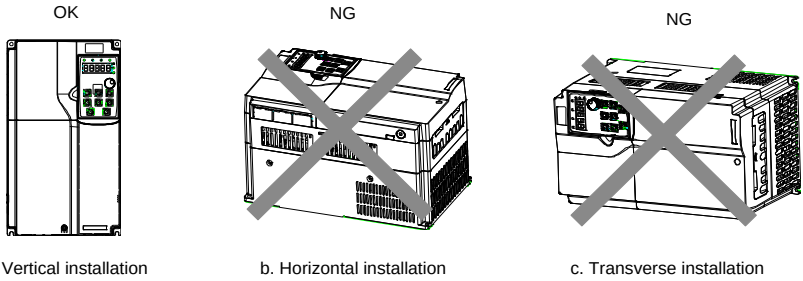

Figure 3-1 Installation direction

3.2.2 Installation method

The drive mounting method varies depending on the size. The mounting methods include wall mounting and flange mounting.

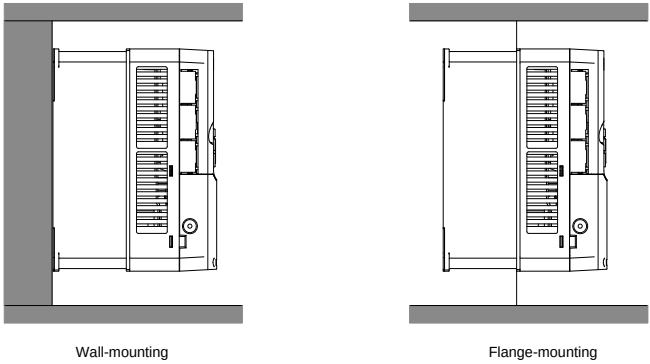

Figure 3-2 Installation method

The mounting procedure is as follows:

1. Mark the position of mounting holes. See appendix for the position of mounting holes.
2. Mount the screws or bolts onto the designated positions.
3. Lean the drive against the wall.
4. Tighten the screws.

Note: The flange mounting plate must be used for flange mounting.

3.2.3 Single-unit installation

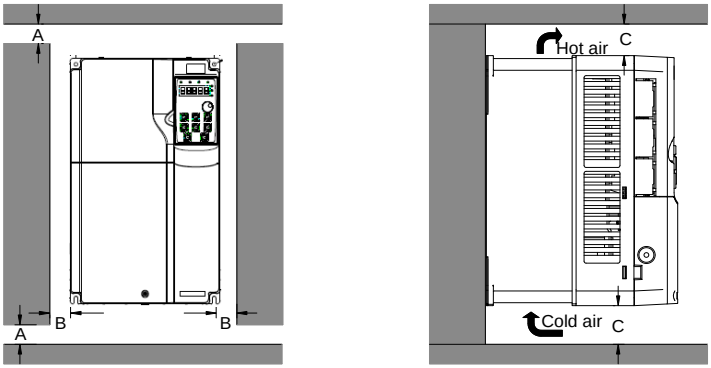

Figure 3-3 Single-unit installation

Note: For clearances A and B, each must be 100mm at least. The clearance C must be 200mm at least.

3.2.4 Multiple-unit installation

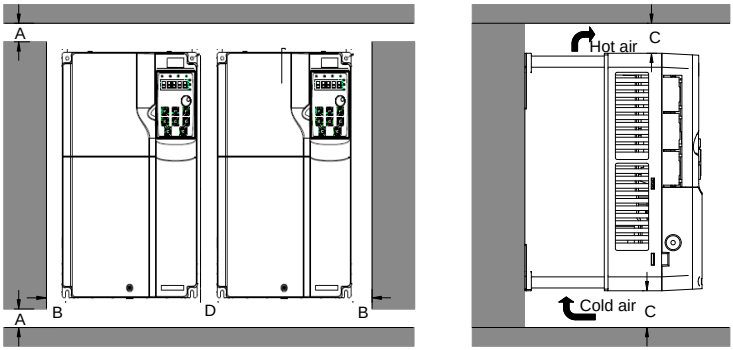

Figure 3-4 Multiple-unit parallel installation

Note:

- ✧ When you install drives in different sizes, align the top of each drive before installation for the convenience of future maintenance.
- ✧ For clearances A, B, and D, each must be 100mm at least. The clearance C must be 200mm at least.

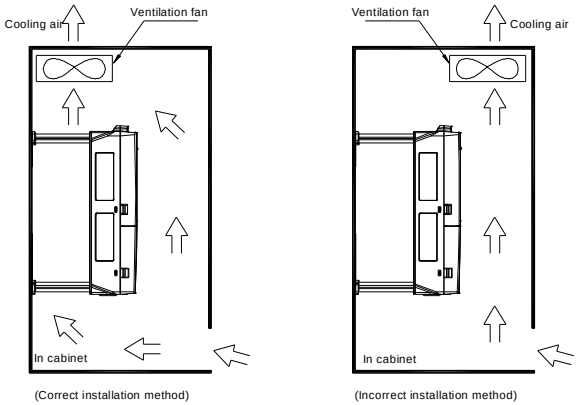

Figure 3-5 Ventilation fan installation position

3.3 Disassembling/assembling the junction box of drive

To disassemble the junction box of drive (for example, PH600.018.43ARSF), do as follows:

1. Loosen and remove the screws of the junction box.
2. Press the snap-fit, pull the junction box outward and take it out.

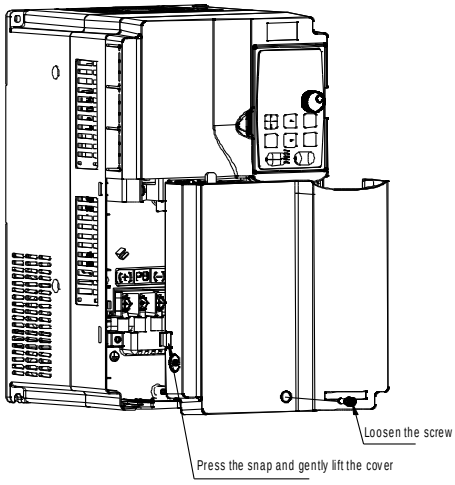

To assemble the junction box of drive (for example, PH600.018.43ARSF), do as follows:

1. Put the junction box horizontally into the convex groove, and push the box so that the junction box and the housing slit overlap.
2. Fasten the two fastening screws of the junction box.

4 Electrical connection

4.1 Wiring precautions

 Warning	1. Only trained and qualified professionals can perform the wiring. Incorrect wiring may cause electric shock or fire.
	2. The drive can be connected directly to an industrial power line. In other words, no transformer is used for isolation. To prevent cross-contact electric shock accidents, use the circuit breaker or fuse with the purpose of wiring.
	3. The drive does not have a built-in ground protection circuit. To build a safer system, please configure a leakage circuit breaker with both overload and short-circuit protection, or configure a ground-wire-protection leakage circuit breaker that is used together with a wiring circuit breaker.
Note	1. It is recommended to use A, B or C grounding method (grounding resistance of 10Ω or less). A point of grounding must be used. When the motor and mechanical firmware are insulated from each other, ground the motor directly.
	2. Use a thick wire (4.0mm^2 or greater) for grounding whenever possible.
	3. Most leakage protection switches on the market are electronic leakage circuit breakers, of which internal leakage current detection and processing circuits vary greatly with manufacturers. Therefore, the breakers from different manufacturers are different in anti-interference ability. It is recommended to use a relatively strong anti-interference leakage circuit breaker.
	4. Route the electrical cables such as power cable and motor input cable separately from signal cables, with an interval of more than 30cm. Do not put the cables in the same pipe or bundle together.
	5. Do not use the same power supply with a welding machine, electrical discharge processing machine, and so on. Even if different power supplies are used, when there is a high frequency generator nearby, connect a noise filter on the input side of the power cable.
	6. Install surge suppressors on the coils of relay, solenoid, and electromagnetic contactor.
	7. To prevent malfunction caused by noise, configure the input command device and noise filter as close as possible to the drive.
	8. Select a reasonable cable diameter, switch capacity, and contactor capacity. See section 4.2 "Switch, contactor, and cable selection".

Note: Incorrect wiring may cause system faults or personal safety risks.

4.2 Switch, contactor, and cable selection

Table 4-1 Recommended cable size

Drive model	Power incoming circuit breaker switch (A)	AC contactor AC3 rated working current (A)	Main circuit						Control circuit
			Recommended cable size (mm^2)					Fastening torque (Nm)	Recommended cable size (mm^2)
			R/S/T U/V/W	Recommended connection terminal model	Terminal screw	PE	Recommended connection terminal model		
PH600.007.43ARSF	40	25	4	TNR3.5-5	M5	4	TNR3.5-5	2–2.5	1.5
PH600.011.43ARSF	50	40	6	TNR5.5-5	M5	6	TNR5.5-5	2–2.5	1.5
PH600.015.43ARSF	60	40	10	TNR8-5	M5	10	TNR8-5	2–2.5	1.5

Drive model	Power incoming circuit breaker switch (A)	AC contactor AC3 rated working current (A)	Main circuit						Control circuit
			Recommended cable size (mm^2)					Fasten-ing torque (Nm)	Recom-mended cable size (mm^2)
			R/S/T U/V/W	Recommended connection terminal model	Terminal screw	PE	Recommended connection terminal model		
PH600.018.43ARSF	80	50	10	TNR8-5	M5	10	TNR8-5	2–2.5	1.5
PH600.022.43ARSF	100	65	16	GTNR16-6	M6	10	GTNR10-5	3.5	1.5
PH600.030.43ARSF	125	80	16	GTNR16-6	M6	10	GTNR10-5	3.5	1.5
PH600.037.43ARSF	160	95	25	GTNR25-6	M6	10	GTNR10-5	3.5	1.5
PH600.045.43ARSF	160	115	25	GTNR25-8	M8	16	GTNR16-6	9–11	1.5
PH600.055.43ARSF	200	150	35	GTNR35-8	M8	16	GTNR16-6	9–11	1.5
PH600.075.43BRSF	250	185	50	GTNR50-8	M8	25	GTNR25-6	9–11	1.5
PH600.090.43BRSF	315	225	70	GTNR70-12	M12	35	GTNR35-6	31–40	1.5
PH600.110.43BRSF	315	260	70	GTNR70-12	M12	35	GTNR35-6	31–40	1.5

The recommended cable for the main circuit can be used at an ambient temperature of 40°C or less. If the ambient temperature is greater than the conditions, it is recommended to use the cable of a higher model. It is recommended to use cables with insulation of at least 500V.

The brake resistor is self-wired. If you want to extend it, the extension wire diameter is not lower than the original resistor wire diameter.


GTNR terminal


Narrow-head terminal

GTNR terminal brand: Suzhou Yuanli (The model varies with the brand.)

SG narrow-head terminal brand: Suzhou RCCN (The model varies with the brand.)

4.3 Terminal layout

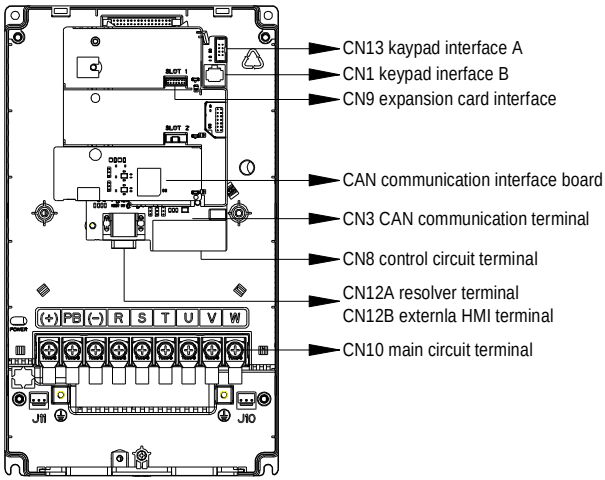

Figure 4-1 Terminal layout diagram

4.4 Standard wiring

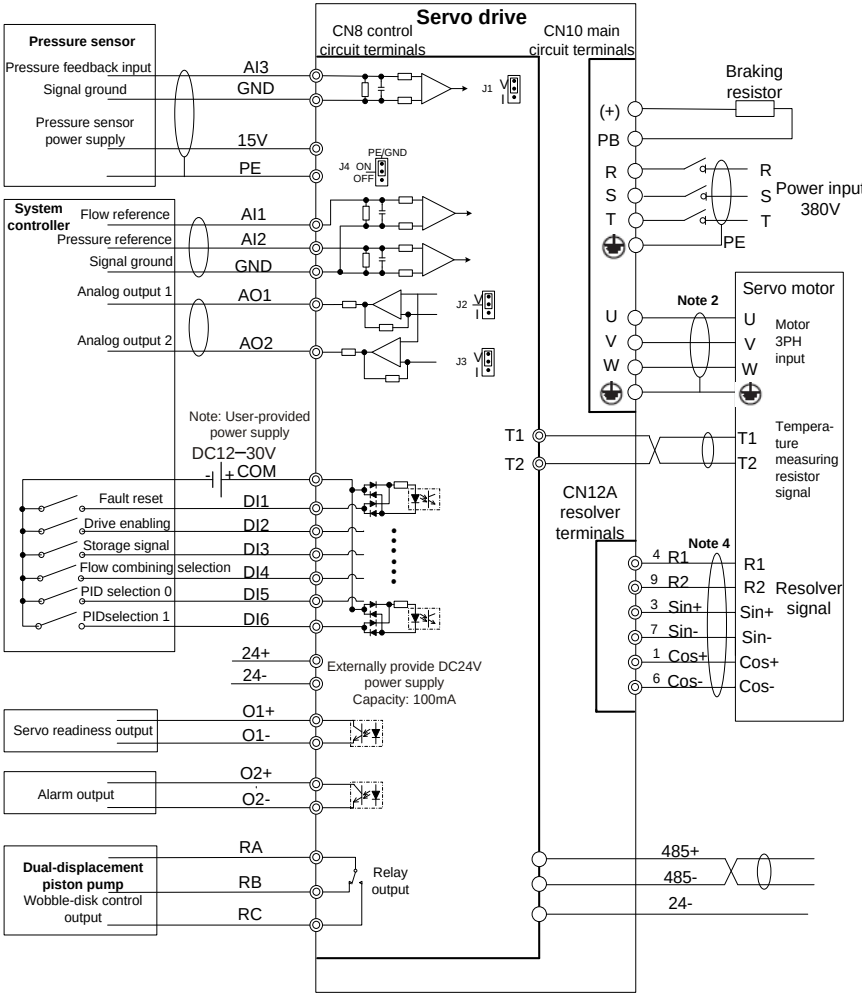

Figure 4-2 Standard wiring diagram

Note:

1. The default pressure sensor of the drive uses 15V as the power supply, and the accepted pressure signal is the voltage signal of 0–10V or 1–5V. Or you can switch the signal to the current signal of 0mA–20mA through the jumper J1 on the control board.
2. To prevent the drive from being affected by interference signal, it is recommended to use

shielded cables for all analog signal cables and motor three-phase input cables, with the shield layer grounded.

3. When using the analog and digital output ports, ensure that the output load resistance is large enough so that the output current is less than the designated value. The default analog output range is 0–10V, and can be switched to 0–20mA current output through the jumper J2/J3 on the control board.
4. The resolver cable and communication cable must use shielded twisted pair cables, with the shield layer grounded. Configure a terminal matching resistor at both the first and last ends of the communication cable. The CAN communication signal connector of the drive has been configured with a built-in 120Ω terminal resistor. The RS485 communication signal connector of the drive has been configured with a built-in 1kΩ terminal resistor.
5. The GND terminal can be connected to PE directly or through RC filter by configuring jumper J3 on the interface board. The GND terminal is directly connected to PE by default.
6. In this wiring diagram, digital input signal uses the external power supply by default. If you want to use internal power supply, you can use the external connection (please note that the internal power supply has a load capacity of 100mA).

4.5 Jumper function

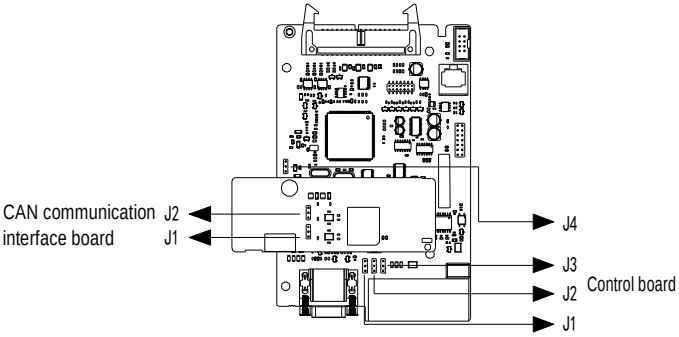

Figure 4-3 Control board circuit diagram

PCB board name	No.	Position	Function	Position	Function
Control board	J1		The default AI3 input is voltage type (0–10V/1–5V)		AI3 input is current type (0–20mA)
	J2		The default AO1 output is voltage type (0–10V)		AO1 output is current type (0–20mA)

PCB board name	No.	Position	Function	Position	Function
	J3		The default AO2 output is voltage type (0–10V)		AO1 output is current type (0–20mA)
	J4		Enables the GND terminal to connect to PE directly by default.		Enables the GND terminal to connect to PE through the resistor and capacitor.
CAN communication interface board	J1		Enables the CAN2 communication connected with a 120Ω termination resistor		Enables the CAN2 communication not connected with a termination resistor
	J2		Enables the CAN1 communication connected with a 120Ω termination resistor		Enables the CAN1 communication not connected with a termination resistor

4.6 Main circuit wiring

4.6.1 Main circuit terminals

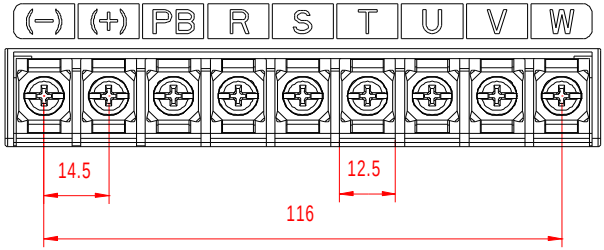

Figure 4-4 Main circuit terminal diagram for 3PH 380V 7.5–11kW (unit: mm)

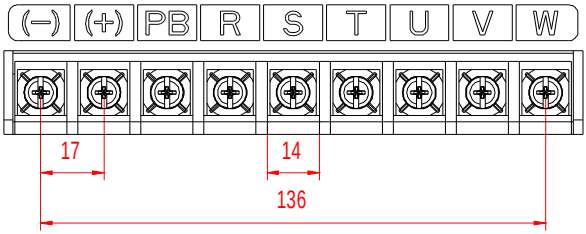

Figure 4-5 Main circuit terminal diagram for 3PH 380V 15–18.5kW

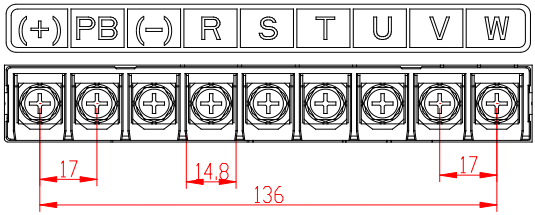

Figure 4-6 Main circuit terminal diagram for 3PH 380V 22kW

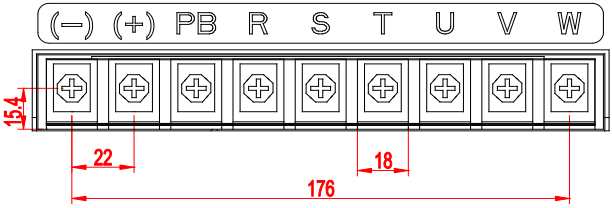

Figure 4-7 Main circuit terminal diagram for 3PH 380V 30–37kW

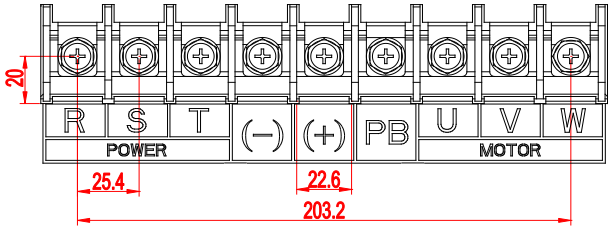

Figure 4-8 Main circuit terminal diagram for 3PH 380V 45–75kW

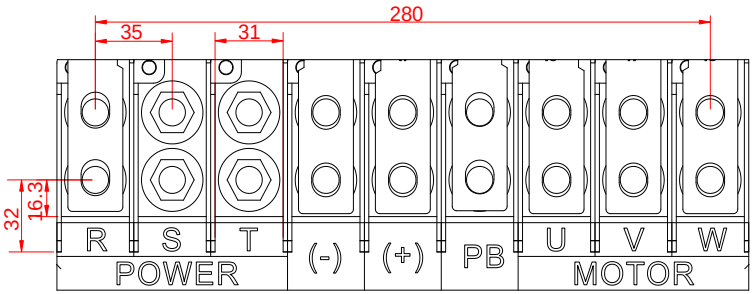

Figure 4-9 Main circuit terminal diagram for 3PH 380V 90–110kW

Terminal name	Terminal symbol	Function
Main circuit power input terminals	R, S, T	AC380V(-15%)–440V(+10%) 47Hz–63Hz
Motor connection terminals	U, V, W	Connect to the motor.
Grounding terminal	⏚	Connects to the power grounding terminal and motor grounding terminal for grounding.
External braking resistor connection terminal (PB terminal available for the model with the rated current of 180A and lower)	(+), PB	An external braking resistor is connected between (+) and PB.
DC reactor terminal (P1 terminal available for the model with the rated current of 215A and higher)	P1, (+)	P1 and (+) connect to external DC reactor terminals.

4.6.2 External HMI terminals and resolver terminals

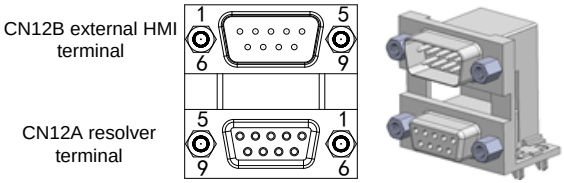

Figure 4-10 CN12A resolver and CN12B external HMI DB9 terminal

The external HMI terminal is the public connector of the external HMI. If you use the external HMI for debugging, insert the connection cable of the HMI.

CN12B external HMI terminal

Signal name	Symbol	Pin	Function
RS485 communication interface	RS485_A RS485_B	CN12B-7 CN12B-2	Semi-duplex. Max. communication rate: 57600bps (default value: 19200bits/s)
Communication power supply	+5VA	CN12B-4,8	5V power supply. Max. output current: 200mA. Accuracy: ± 5%
GND	GND_5VA	CN12B-5,9	

CN12A resolver terminal

Signal name	Symbol	Pin	Function
Resolver sine input + Resolver sine input -	Sin+ Sin-	CN12A-3 CN12A-7	Resolver sine feedback signal
Resolver cosine input + Resolver cosine input -	Cos+ Cos-	CN12A-1 CN12A-6	Resolver cosine feedback signal
Excitation signal + Excitation signal -	R1 R2	CN12A-4 CN12A-9	Resolver excitation signal

4.6.3 Motor power cable and temperature measuring resistor terminals

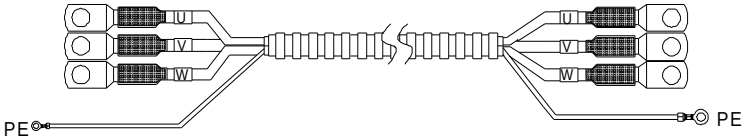

Figure 4-11 Motor power cable

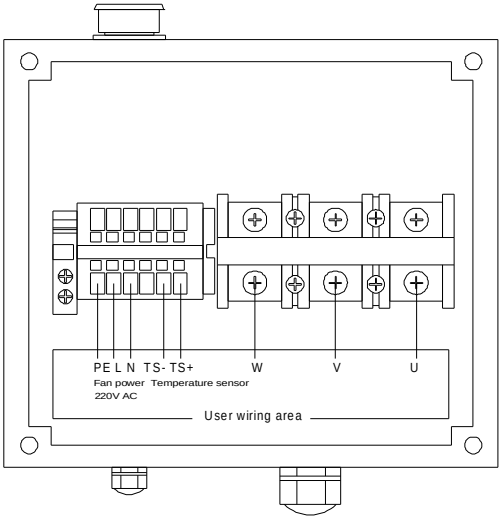

Figure 4-12 Motor wiring terminals

No.	Name	Definition
1	U	Motor three-phase inputs
2	V	
3	W	
4	TS+	Temperature measuring resistor
5	TS-	
6	N	Fan power supply, 220V AC
7	L	
9	PE	Grounding

4.6.4 Motor resolver connection cable and terminals

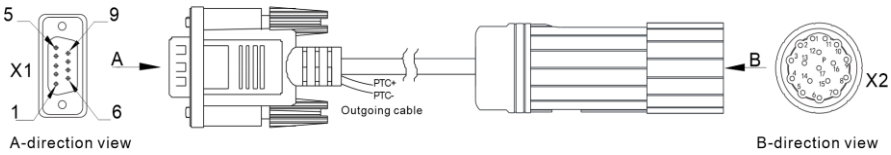

Figure 4-13 Motor resolver connection cable and terminals

Table 4-2 Wiring mapping

Signal	X1	X2	Core wire structure
R1	4	7	Twisted pair
R2	9	10	
Sin+	3	14	Twisted pair
Sin-	7	4	
Cos+	1	5	Twisted pair
Cos-	6	6	
PTC+	CN8 Control terminal：T1	16	Twisted pair
PTC-	CN8 Control terminal：T2	17	
PE	Housing	Housing	Woven
Note： The driver side plug of the rotary cable has two outgoing cable, which are the motor thermistor PTC130 outgoing cable, directly connected to T1 and T2, regardless of positive or negative；			

4.6.5 Typical wiring examples of main circuit

Note	1. Only one wire can be inserted into each wire insertion port of the connector.
	2. The motor three-phase cable must be a shielded cable, of which one end connects to the drive ground wire, and the other end connects to the motor connector ground wire.

	3. The screws need to be fastened properly to ensure a smooth connection.

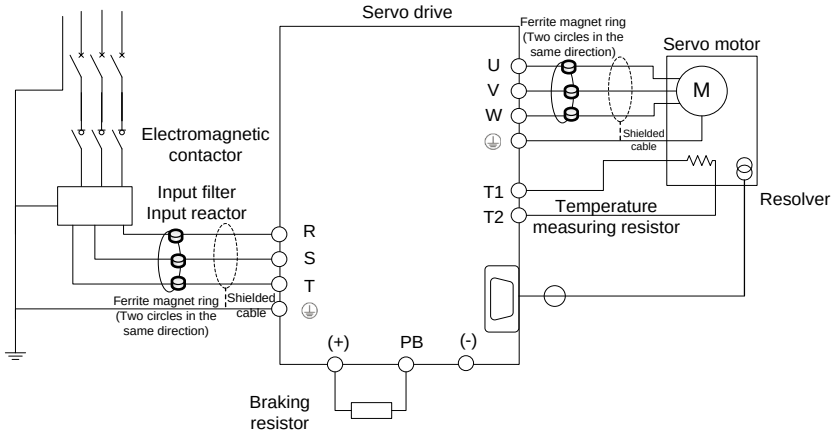

Figure 4-14 Main circuit wiring diagram

4.6.6 Wiring procedure for main circuit terminals

1. Connect the input power cable to the drive power input terminals R, S, and T. Connect the ground conductor of the input power cable to any of drive ground screws and fasten the screw properly to ensure a smooth connection.
2. Connect the motor three-phase input terminals U, V and W to the motor connection terminals U, V and W respectively, and fasten the screws properly to ensure a smooth connection. Connect the motor ground terminal to any of the drive ground screws. Connect the motor temperature measuring resistor terminals to the terminals T1 and T2 on the drive control board. Connect the motor resolver connection terminal to the drive connector CN4, and fasten the screws.
3. Connect the two wiring terminals of braking resistor to the drive terminals （+） and PB respectively, and fasten the screws properly to ensure a smooth connection.

4.7 Input and output signal wiring

4.7.1 Control circuit terminals

Figure 4-15 shows the control circuit terminals.

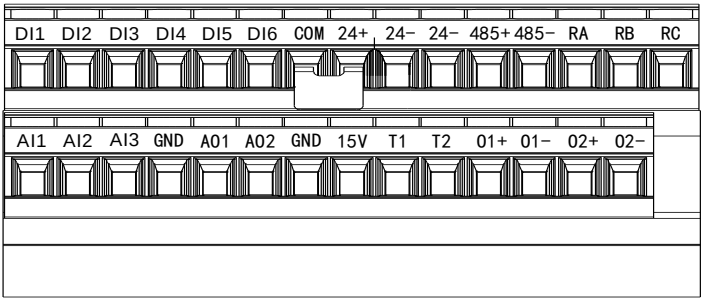

Figure 4-15 Control circuit terminals

Description of control circuit terminals:

Category	Terminal name	Terminal symbol	Pin	Function
Analog input	Analog input 1 (default flow reference)	AI1	CN8-16	Input range: 0–10V, 12bit resolution, calibration accuracy 0.5%; Input impedance: 24kΩ.
	Analog input 2 (default pressure reference)	AI2	CN8-17	Input range: 0–10V, 12bit resolution, calibration accuracy 0.5%; Input impedance: 24kΩ.
	Analog input 3 (default pressure feedback)	AI3	CN8-18	Input range: 0–10V/1–5V/0–20mA, 12bit resolution, calibration accuracy 0.5%; use the jumper J1 on the control board to select the input of 0–10V/1–5V or 0–20mA. Input impedance: 100kΩ for voltage input; 500Ω for current input.
Analog output	Analog output 1	AO1	CN8-20	Default terminal function: pressure feedback output. Monitoring output. Internal parameter output can selected through the LED panel. Whether voltage or current is used for output is set through the jumper J2 on the control board. Output range: 0–10V or 0–20mA, 10bit resolution, calibration accuracy 1%, max. load resistance≤500Ω.
	Analog output 2	AO2	CN8-21	Default terminal function: speed feedback output. Monitoring output. Internal parameter output can selected through the LED panel. Whether voltage or current is used for output is set through the jumper J3 on the control board.

Category	Terminal name	Terminal symbol	Pin	Function
				Output range: 0–10V or 0–20mA, 10bit resolution, calibration accuracy 1%, max. load resistance≤500Ω.
Motor temperature	Motor temperature sensor	T1	CN8-24	The motor temperature sensor terminals (T1, T2) do not distinguish the positive or negative pole.
		T2	CN8-25	The drive supports the motor temperature sensors (or resistors) of the KTY84, PT1000, and PTC130 types. You can change the motor temperature sensor type through the LED panel. Then the hardware circuit automatically selects the corresponding temperature sensor detection circuit.
Power supply	Pressure sensor power supply	15V	CN8-23	Voltage: +15VDC, ±5% (in full scale range), output < 50mA at 25°C.
		GND	CN8-19 CN8-22	Analog signal ground terminal.
	24V power for digital signal	+24	CN8-8	Positive pole of 24V power supply.
		-24	CN8-9 CN8-10	Negative pole of 24V power supply.
Digital input	Digital input 1	DI1	CN8-1	Default terminal function: fault reset, releasing the servo alarm status.
	Digital input 2	DI2	CN8-2	Default terminal function: servo enabling, unlocking the gate of drive to switch the motor to enter the energized state. After the driver power-on, the motor will be powered on with a delay of 3 seconds upon the first servo enabling and 10 seconds upon the second enabling.
	Digital input 3 Digital input 4	DI3 DI4	CN8-3 CN8-4	DI3 default terminal function: storage signal input (used with the electronic back pressure function). A high-level injection molding machine works in the storage state, while a low-level injection molding machine works in another state. Motor rotation direction signal (used with the node flow loop). Forward direction for low level, while reverse direction for high level.

<table>
<tr><th>Category</th><th>Terminal name</th><th>Terminal symbol</th><th>Pin</th><th>Function</th></tr>
<tr><td rowspan="4"></td><td></td><td></td><td></td><td>DI4 default terminal function: flow splitting/combining selection (used with multi-pump combined flow control). Splitting flow for high level, while combing flow for low level.</td></tr>
<tr><td>Digital input 5</td><td>DI5</td><td>CN8-5</td><td rowspan="2">DI5 default terminal function: PID terminal 1
DI6 default terminal function: PID terminal 2
Stepped PID parameter selection for single-pump pressure (4 steps)
DI6 DI5 KP No. KI No. KD No.
low low 0 0 0
low high 1 1 1
high low 2 2 2
high high 3 3 3
Stepped PID parameter selection for multi-pump pressure control (4 steps)
DI6 DI5 KP No. KI No. KD No.
low low 0 0 0
low high 1 1 1
high low 2 2 2
high high 3 3 3</td></tr>
<tr><td>Digital input 6</td><td>DI6</td><td>CN8-6</td></tr>
<tr><td>Common terminal of digital input</td><td>COM</td><td>CN8-7</td><td>Common terminal of IO input. When COM is connected at high level, the IO input low level is valid. When COM is connected at low level, the IO input high level is valid.</td></tr>
<tr><td rowspan="3">Digital output</td><td rowspan="2">Digital output 1</td><td>O1+</td><td>CN8-26</td><td rowspan="2">Servo readiness. If the main circuit is powered on without alarm output, the drive is on when the drive enabling end is at low level.</td></tr>
<tr><td>O1-</td><td>CN8-27</td></tr>
<tr><td>Digital output 2</td><td>O2+
O2-</td><td>CN8-28
CN8-29</td><td>Alarm output. If an exception is detected, the output signal state is reversed.</td></tr>
<tr><td rowspan="3">Relay output</td><td>Common terminal</td><td>RA</td><td>CN8-13</td><td rowspan="3">Wobble-disk output signal (used with the dual-displacement pump wobble-disk control function). On for small flow, while off for heavy.
Relay output contact capacity: 0.5A/125VAC, 1A/30VDC. RB is NC terminal and RC is NO terminal.</td></tr>
<tr><td>NC terminal</td><td>RB</td><td>CN8-14</td></tr>
<tr><td>NO terminal</td><td>RC</td><td>CN8-15</td></tr>
<tr><td rowspan="2">Communication terminal</td><td rowspan="2">RS485 communication</td><td>485+</td><td>CN8-11</td><td rowspan="2">RS485 communication interface supports the standard Modbus RTU communication protocol. It is configured with a built-in 1kΩ</td></tr>
<tr><td>485-</td><td>CN8-12</td></tr>
</table>

Category	Terminal name	Terminal symbol	Pin	Function
				terminal resistor. Semi-duplex. Supporting 9600bps, 19200bps, 38400bps, and 57600bps (19200bps by default).
		24-	CN8-10	RS485 shield ground
		C2L	CN3-4	

4.7.2 Typical control signal wiring examples

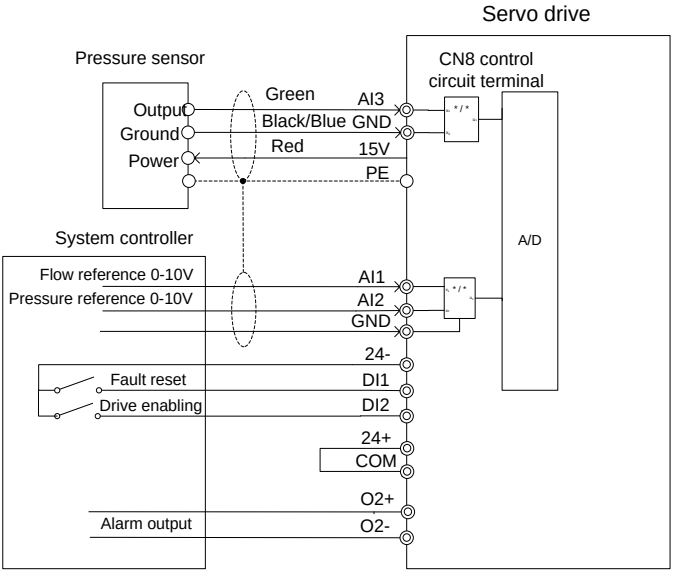

Figure 4-16 Typical control signal wiring examples

4.8 Control signal interface circuit

4.8.1 Analog input circuit

The analog input circuit is described as follows:

1. For pin 16 (flow reference) and pin 17 (pressure reference) of CN8 connector:

Voltage input: 0–10V; input impedance: 24kΩ

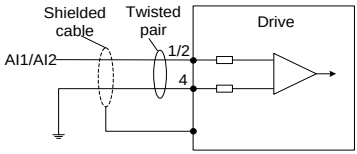

Figure 4-17 Analog input diagram

2. For pin 18 (pressure feedback input) of CN8 connector:

The analog signal is the oil pressure feedback signal. You can use the jumper J1 to select whether the pressure sensor input is 0–10V/1–5V or 0–20mA. Default: 0–10V. Input impedance: 100kΩ.

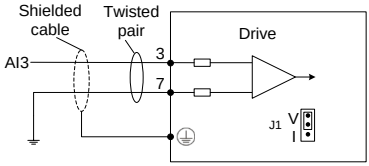

Figure 4-18 Pressure feedback input diagram

4.8.2 Analog output circuit

Analog output signals (AO1, AO2) are output from the OPA, with which the GND makes up an output circuit. You can select internal parameter output through the LED panel. By default, AO1 is pressure output, while AO2 is motor speed output.Output range: 0–10V or 0–20mA, 10bit resolution, calibration accuracy 1%, max. load resistance≤500Ω. Whether voltage or current is used for output is set through jumpers J2 and J3 on the control board. The following shows the interface circuit:

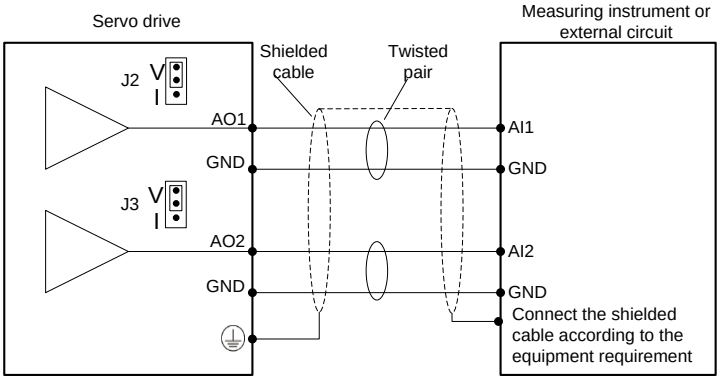

Figure 4-19 Analog output diagram

4.8.3 Digital input circuit

1. Wiring when using the user-provided power supply:

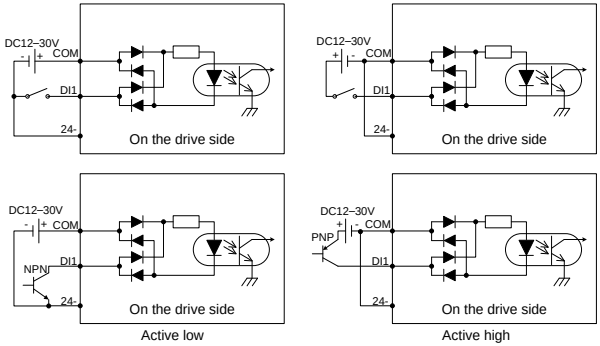

Figure 4-20 Digital input diagram

2. Wiring when using the local-provided power supply:

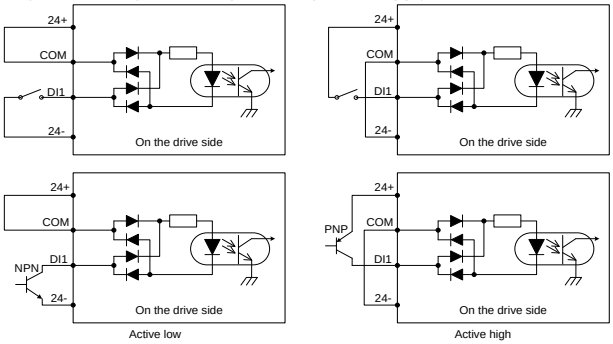

Figure 4-21 Digital output diagram

Note:

- The digital input circuit has two connection methods: a mechanical switch connection as shown in the figure and an open collector connection for triodes (NPN and PNP types, but the two cannot be mixed).
- Either the 24V power supply with a maximum current of 100mA carried by the servo driver or the user-provided 12–30V power supply can be used as the 24V power supply.

4.8.4 Digital output circuit

There are three digital output circuits, all of which are open-collector output structures as shown in Figure 4-22 and Figure 4-23. They can be used to drive relay coils or optocoupler loads with the load capacity shown in Figure 4-22 and Figure 4-23. When connecting inductive loads such as relay coils, install current-continuing diodes in the way shown in Figure 4-22 and Figure 4-23. When connecting optocouplers, a current-limiting resistor must be connected; otherwise, damage to the drive may occur.

The local 24V power supply can only provide a maximum current of 100mA. If the actual load current exceeds 100mA, please use your own power supply with the recommended capacity of 500mA.

1. Wiring when using the user-provided power supply:

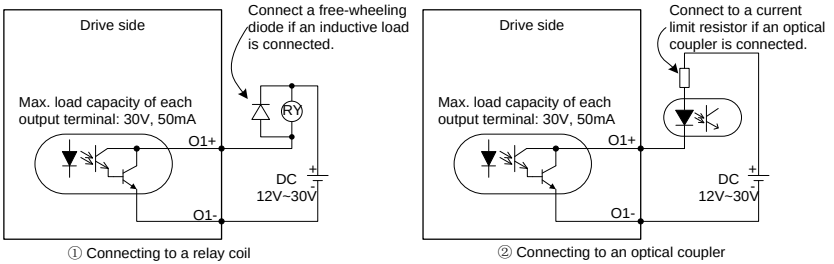

Figure 4-22 External power digital output diagram

2. Wiring method using the local-provided power supply:

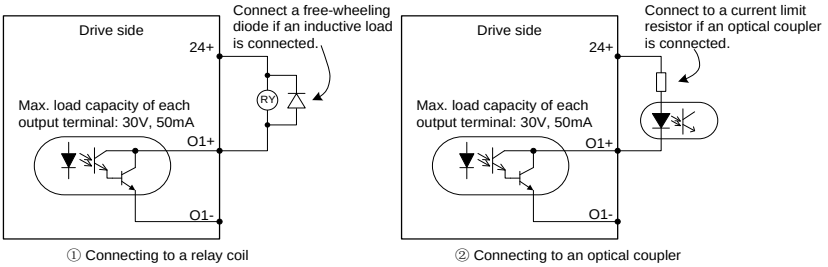

Figure 4-23 Internal power digital output diagram

3. The relay output circuit is described as follows:

Inductive loads (relays, motors) will produce voltage spikes when the current is cut off, so it is necessary to use varistors at the contact points of relays for protection and install absorption circuits on inductive loads, such as varistors, RC absorption circuits, diodes, etc., to ensure minimal interference at the time of shutdown.

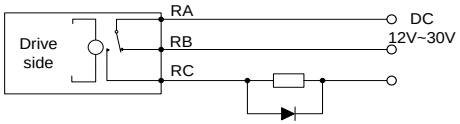

Figure 4-24 Relay output diagram

4.9 CAN communication card

The drive can connect to a high-speed CANopen communication network by connecting the

CN3 terminal on the CAN communication card to the CN10 terminal on the main control board, implementing field bus control. The following shows the CAN communication card.

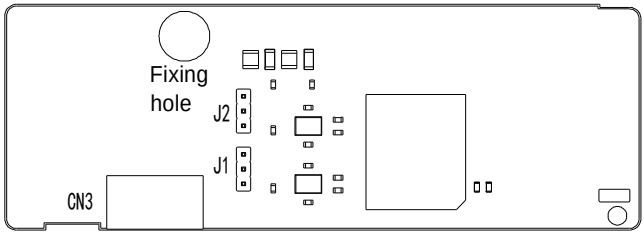

Figure 4-25 CAN communication board

4PIN terminal	Terminal Name	Symbol	PIN	Function
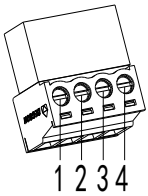	CAN1 communication	C1H C1L	CN3-1 CN3-2	CAN communication port 1 is used to connect multiple drives in multi-pump parallel connection system. It supports standard CAN protocol signal, using the optocoupler for isolation, and internally connects to a 120Ω terminal resistor through jumper selection.
	CAN2 communication	C2H C2L	CN3-3 CN3-4	CAN communication port 2 supports the CANopen communication protocol and internally connects to a 120Ω terminal resistor through jumper selection.

4.10 EtherCAT communication card (EC-TX508)

EtherCAT adopts standard RJ45 interfaces, and the two RJ45 interfaces have different directions. The interfaces are shown in Figure 4-26. IN (indicating input) and OUT (indicating output) are EtherCAT wiring network interfaces. The interfaces are described in Table 4-3.

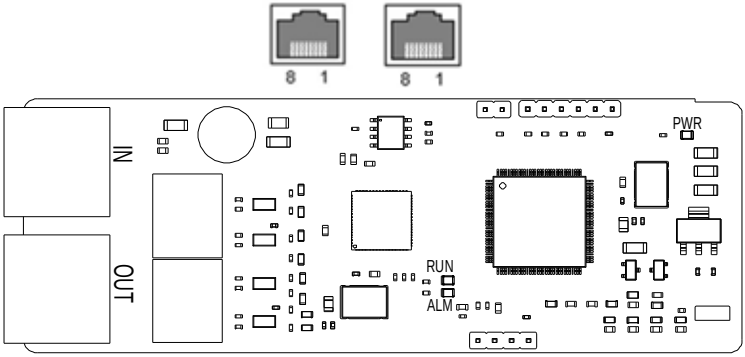

Figure 4-26 RJ45 interface diagram

Table 4-3 RJ45 interface function table

Pin	Name	Description
1	TX+	Transmit Data+
2	TX-	Transmit Data-
3	RX+	Receive Data+
4	n/c	Not connected
5	n/c	Not connected
6	RX-	Receive Data-
7	n/c	Not connected
8	n/c	Not connected

Status indicator

The EtherCAT communication card provides four LED indicators and four net port indicators to indicate its states, see Table 4-4.

Table 4-4 Indicator definition table

Name	Color	Meaning
RUN	Green	Indicates the EtherCAT running state. Off: Init state Blinks (Off:0.2s; On:0.2s): Pre-OP state Blinks (Off:1s; On:0.2s): Safe-OP state On: OP state
ALM	Red	Indicates the EtherCAT fault state. Off: No fault Blinks (Off:0.2s; On:0.2s): Init, Pre-OP state Blinks (Off:1s; On:0.2s): Safe-OP state

Name	Color	Meaning
		On: OP fault state
PWR	Red	3.3V power indicator
Net port indicator (IN)	Yellow	Off: Ethernet connection is not established. On: Ethernet connection is successful.
	Green	Off: No link On: Link exists but no active Blinks: Link exists and active
Net port indicator (OUT)	Yellow	Off: Ethernet connection is not established. On: Ethernet connection is successful.
	Green	Off: No link On: Link exists but no active Blinks: Link exists and active

Electrical connection

An EtherCAT network often consists of a master (PLC) and multiple slaves (drives or bus expansion terminals). Each EtherCAT slave has two standard Ethernet interfaces. Figure 4-27 shows the electrical wiring.

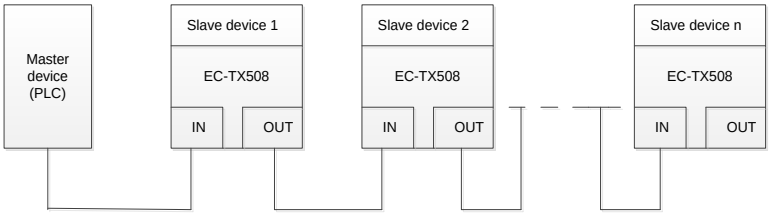

Figure 4-27 Linear network topology electrical connection

5 Operating through the LED panel

5.1 LED keypad introduction

The keypad is used to control the drives, read drive status, and set parameters. See the following figure：



Figure 5-1 Film keypad

No.	Name	Display	Description	
1	Status indicator	RUN/TUNE	Off: The drive is stopped. Blinks: The drive is at electronic state or factory test state. On: The drive is in run state.	
		FWD/REV	Forward or reverse running indicator Off: The drive is running forward. On: The drive is running reversely.	
		LOCAL/REMOT	Command mode indicator Off: Digital input (keypad, HMI panel, or PC software input) Blinks: Analog input or internal setting On: Continuous CAN communication input, continuous RS485 communication input, CANopen input, EtherCAT input, or PROFINET input.	
		TRIP	Fault indicator Off: The drive is in normal state. On: The drive is in fault state.	
2	Unit indicator		Hz	Frequency unit
			RPM	Rotation speed unit
			A	Current unit
			%	Percentage

No.	Name	Display	Description	
		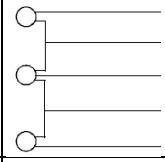	V	Voltage unit
3	Digital display zone	Five-digit LED displays various monitoring data and alarm codes such as the speed feedback and pressure feedback.		
4	Digital potentiometer	Used for input voltage regulation.		
4	Keys		Programming key	To switch between modes or return to the previous menu level.
			Confirmation key	To enter next menu in parameter mode and to confirm the setting of parameter in edit mode.
			Up key	To increase data or move upward.
			Down key	To decrease data or move downward.
			Right-shifting key	To decrease the value of function code by 10 or shift the cursor left in edit mode.
			Multifunction shortcut key	To increase the value of function code by 10.
			Run key	To run the drive when the keypad is used for control.
			Stop/Reset key	To stop the drive from running when the keypad is used for control. To reset the drive in any control modes when it is in fault alarm state.

- **LED display description:**

Display	Means	Display	Means	Display	Means	Display	Means	Display	Means	Display	Means
	0		1		2		3		4		5
	6		7		8		9		A		b

Display	Means	Display	Means	Display	Means	Display	Means	Display	Means	Display	Means
	C		d		E		F		G		h
	I		J		K		L		M		N
	O		P		q		R		S		T
	U		V		W		X		Y		Z
	-		-	-	-	-	-	-	-	-	-

- **Keypad display:**

When the drive is powered on, the LED turns on. The LED digital value displays the motor rotation speed (rpm) by default, accurate to the ones place.

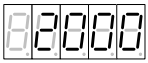

If a fault occurs during power-on or running, the TRIP indicator is on and the LED value places display the fault code. The fault code consists of a fault ID (the first three digits on the digital tube from left to right display Err) and a fault code number (the last two digits on the digital tube from left to right display two digits).

If there are multiple faults that occur at the same time, multiple fault codes are displayed in a repeated cycle.

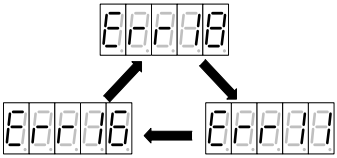

- **Keypad unlocking:**

The LED keypad operation is locked when powered on. When it is in the locked state, the PRG ESC key can only switch between short-cut mode and user mode.

To switch to other operation modes, press and hold the ∧ ∨ keys together for 1 second. When the LED value places display ULOCK, the drive keypad is unlocked. If the drive does not have a fault at this time, the drive keypad enters the shortcut mode. If the drive is faulty, press PRG ESC to enter the shortcut mode.

5.2 LED panel functions

5.2.1 Keypad operation mode

The drive provides six keypad operation modes, which can be switched over through the PRG/ESC key.

Shortcut mode (xxxxx): used to display key parameters.

Quick setup mode (Exx): used to set key parameters and debug the motor.

Monitoring mode (dxx): used to display status parameters.

Setup mode (Fxxx): used to set basic parameters.

Debug mode (hxx): used to debug the motor and save parameters.

Multi-pump mode (Pxx): used to set multi-pump parallel connection parameters.

Operation flowchart:

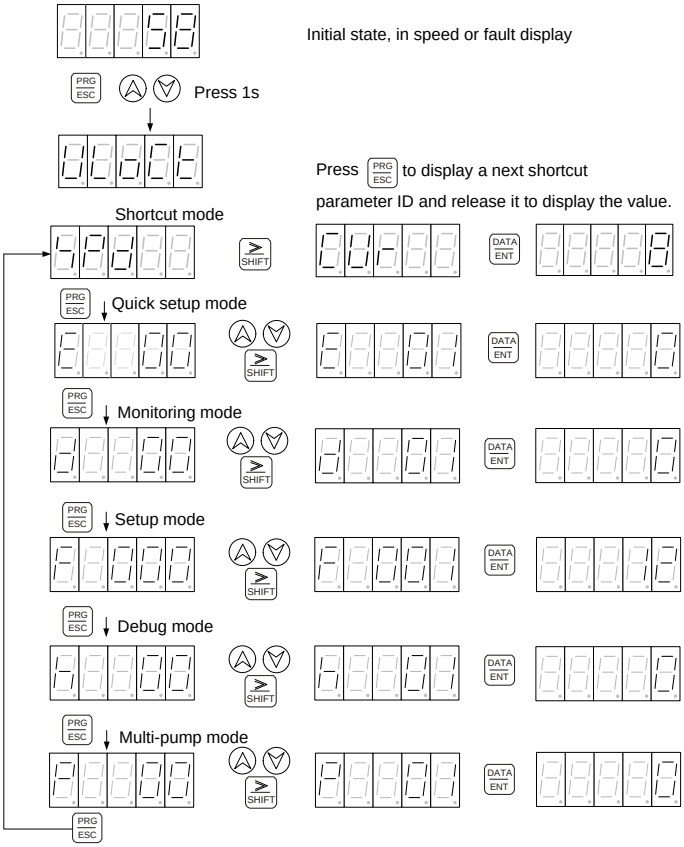

5.2.2 Shortcut mode

In shortcut mode, you can press the SHIFT key to quickly observe the important parameters of drive. In lock state, if you press and hold the ▲▼ key for 1s to enter the shortcut mode, the LED displays the values of selected parameters. If you press the SHIFT key, the LED displays the next parameter ID. If you release the SHIFT key, the LED displays the parameter value.

In shortcut mode, if no key acts within 1min, the speed or fault display interface automatically appears.

Parameters displayed in shortcut mode:

ID	DEFINITION	RANGE	UNIT
SPD	Speed feedback	[-6000,6000]	rpm
CUR	Current feedback	[0900,0]	A
RES	Resolver feedback	[0,4096]	-
PRS	Pressure feedback	[0,500]	bar
PIDS	PID step no.	[0,3]	-

5.2.3 Quick setup mode

If you press the PRG ESC key to select the quick setup mode, the LED value places display "E--xx", in which "xx" indicates a parameter ID. You can press the ▲▼ or SHIFT key to select a parameter ID. When you press and hold the DATA ENT key and then release it, the selection is completed. Then the LED value places display the parameter value. If you want to modify a parameter, you can press the SHIFT key to move the blinking place and press the ▲ or ▼ key to change the value of the blinking place. After the value is modified, press and hold the DATA ENT key and release it. Then the modification is automatically saved and blinking stops. If you press the DATA ENT or ▲▼SHIFT key again at this time, you can modify the parameter again. The places which can be modified blink. Press the PRG ESC key to exit.

Code	Definition	Range	Default	Unit
E00	Enabling run Press and hold the DATA ENT key to enter the run enabling mode. The LED displays the ON or OFF state of run enabling. Press and hold the DATA ENT key and then release it to switch the state.	OFF: Disable ON: Enable	Related to IO level enabling of drive	

Code	Definition	Range	Default	Unit
E01	PHYSIS motor model selection After the access, the LED displays . Select the sequence number at the first two places, and select the motor model code at the last three places. Press the ▲ or ▼ key to select the required motor. Press and hold the DATA/ENT key and then release it. Then the LED displays  for you to set the motor. If the setting succeeds, the LED displays the selected motor model. If the setting failed, the LED displays .		E01010F173 	
E02	Pump model selection After the access, the LED displays 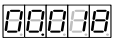. Select the sequence number at the first two places, and select the oil pump displacement at the last three places. Press the ▲ or ▼ key to select the required pump. Press and hold the DATA/ENT key and then release it. Then the LED displays  for you to set the pump. If the setting succeeds, the LED displays the selected pump model. If the setting failed, the LED displays .	For details, see the oil pump model table.	PUMP 100 mL/r 	
E03	After the access to the pressure feedback zero calibration, the LED displays the analog voltage feedback of pressure sensor. Press and hold the DATA/ENT key and release it for calibration. Then the LED displays . If the calibration succeeds, the LED displays . If the calibration failed, the LED displays .			
E04	Measuring the initial angle The initial angle can be measured only when the run enabling state is OFF. Press and hold the DATA/ENT key and then release it to enter the initial angle measuring menu. Then the LED displays			

Code	Definition	Range	Default	Unit
	the previous resolver offset. Press and hold the DATA ENT key and then release it to measure the initial angle. If the LED displays , measuring is being performed. If the measuring is completed, the LED displayed the actual measured offset. If the measuring failed, the LED displays . During measuring, you can press the MODE key to exit.			
E05	Full pressure scale range This value also determines the max. pressure. In addition, it also adjusts the pressure reference gain so that when the pressure reference input is 9.99V, the pressure reference corresponds to the recently set pressure full scale range value. After the access, the LED displays the recently set full pressure scale range value. Press the SHIFT key to change to the required value. Press and hold the DATA ENT key and then release it to confirm the value.	[1500]	175	bar
E06	Full flow scale range This value also determines the max. flow. In addition, it also adjusts the flow reference gain so that when the flow reference input is 9.99V, the flow reference corresponds to the recently set flow full scale range value. After the access, the LED displays the recently set full flow scale range value. Press the key to change to the required value. Press and hold the DATA ENT key and then release it to confirm the value.	[1,2400]	200	L/min
E07	Pressure zero calibration Press and hold the DATA ENT key and then release it for access. Then the LED displays the pressure reference analog value. and hold the DATA ENT key and then release it for zero calibration. Then the LED displays . If the calibration succeeds, the LED displays . If the calibration failed, the LED displays .	Analog voltage range [0.00,9.99]		V

Code	Definition	Range	Default	Unit
E08	Full pressure scale range calibration Press and hold the DATA ENT key and then release it for access. Then the LED displays the actual pressure reference analog value. After confirming the value, press and hold the DATA ENT key and then release it for zero calibration. Then the LED displays -----. If the calibration succeeds, the LED displays donE. If the calibration failed, the LED displays FAIL.	Analog voltage range [0.00,9.99]		V
E09	Flow zero calibration Press and hold the DATA ENT key and then release it for access. Then the LED displays the flow reference analog value. and hold the DATA ENT key and then release it for zero calibration. Then the LED displays -----. If the calibration succeeds, the LED displays donE. If the calibration failed, the LED displays FAIL.	Analog voltage range [0.00,9.99]		V
E10	Full flow scale range calibration Press and hold the DATA ENT key and then release it for access. Then the LED displays the actual flow reference analog value. After confirming the value, press and hold the DATA ENT key and then release it for zero calibration. Then the LED displays -----. If the calibration succeeds, the LED displays donE. If the calibration failed, the LED displays FAIL.	Analog voltage range [0.00,9.99]		V
E11	Writing parameters Press and hold the DATA ENT key and then release it for access. Then the LED displays SAVE. Press and hold the DATA ENT key and then release it to start parameter writing. Then the LED displays -----. If the writing succeeds, the LED displays donE. If the calibration failed, the			

Code	Definition	Range	Default	Unit
	LED displays .			
E12	Jogging Press and hold the DATA ENT key and then release it to enter the jogging mode. Then the LED displays , prompting you to jog. Press the ▲ or ▼ key to run the motor forward or reversely. Press the PRG ESC key to exit the jogging mode and return to the "Exx" menu.	▲: Jog forward ▼: Jog reversely		
E13	Enabling diagnosis Press and hold the DATA ENT key to enter the diagnosis enabling mode. The LED displays 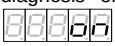 or . and hold the DATA ENT key and then release it to switch the state.	OFF: Disable ON: Enable	OFF	
E14	Motor parameter autotuning Diagnosis enabling takes effect only when motor parameter autotuning is enabled. Press and hold the DATA ENT key and then release it to enter the motor parameter autotuning menu. Then the LED displays "0". After selecting a parameter autotuning mode, and hold the DATA ENT key and then release it to start autotuning motor parameters. Then the LED displays , which indicates autotuning. If autotuning succeeds, the LED displays . If autotuning failed, the LED displays . During autotuning, you can press the PRG ESC key to exit and return to the "Exx" menu.	0: Disable 1: Dynamic 2: Static 1 3: Static 2	0: Disable	
E15	Pressure sensor model selection Press and hold the DATA ENT key and then release it for access. Select a pressure sensor model. Press and hold the DATA ENT key and then release it for setting. You can press the PRG ESC key to exit and return to the "Exx" menu.	5V: 1–5V, 0–200bar sensor 10V: 0–10V, 0–250bar sensor 400bar: 0–10V, 0–	10V	

Code	Definition	Range	Default	Unit
		400bar sensor		
E16	Pressure proportional gain Press and hold the DATA ENT key and then release it for access. Press the ▲ or ▼ key to set parameters. Press and hold the DATA ENT key and then release it for setup. You can press the PRG ESC key to exit and return to the "Exx" menu.	[0,32767]	13000	
E17	Pressure integral gain Press and hold the DATA ENT key and then release it for access. Press the ▲ or ▼ key to set parameters. Press and hold the DATA ENT key and then release it for setup. You can press the PRG ESC key to exit and return to the "Exx" menu.	[0,32767]	100	
E18	Speed proportional gain 0 Press and hold the DATA ENT key and then release it for access. Press the ▲ or ▼ key to set parameters. Press and hold the DATA ENT key and then release it for setup. You can press the PRG ESC key to exit and return to the "Exx" menu.	[0,32767]	6000	
E19	Speed integral gain 0 Press and hold the DATA ENT key and then release it for access. Press the ▲ or ▼ key to set parameters. Press and hold the DATA ENT key and then release it for setup. You can press the PRG ESC key to exit and return to the "Exx" menu.	[0,32767]	120	
E20	Speed proportional torque boost Press and hold the DATA ENT key and then release it for access. Press the ▲ or ▼ key to set parameters. Press and hold the DATA ENT key and then release it for setup. You can press the PRG ESC key to exit and return to the "Exx" menu.	[0,1000]	0	%
E21	Speed integral torque boost Press and hold the DATA ENT key and then release it	[0,1000]	0	%

Code	Definition	Range	Default	Unit
	for access. Press the ▲ or ▼ key to set parameters. Press and hold the DATA ENT key and then release it for setup. You can press the PRG ESC key to exit and return to the "Exx" menu.			
E22	Max. speed for pump reverse run Press and hold the DATA ENT key and then release it for access. Press the ▲ or ▼ key to set parameters. Press and hold the DATA ENT key and then release it for setup. You can press the PRG ESC key to exit and return to the "Exx" menu.	[0,-6000]	-300	Rpm
E23	Reverse torque upper limit Press and hold the DATA ENT key and then release it for access. Press the ▲ or ▼ key to set parameters. Press and hold the DATA ENT key and then release it for setup. You can press the PRG ESC key to exit and return to the "Exx" menu.	[0,100]	100	%
E24	Overpressure protection threshold Press and hold the DATA ENT key and then release it for access. Press the ▲ or ▼ key to set parameters. Press and hold the DATA ENT key and then release it for setup. You can press the PRG ESC key to exit and return to the "Exx" menu.	[0,500]	195	bar
E25	Pump stuck detection Press and hold the DATA ENT key and then release it for access. Press the ▲ or ▼ key to set parameters. Press and hold the DATA ENT key and then release it for setup. You can press the PRG ESC key to exit and return to the "Exx" menu.	0: Disable 1: Enable	1	
E26	Analog channel zero-drift autotuning Enable the autotuning. The LED displays 8888. Press and hold the DATA ENT key and then release it to complete the zero-drift correction automatically.	0: Disable 1: Enable	0	

5.2.4 Monitoring mode

If you press the PRG/ESC key to select the monitoring mode, the value places on the LED display "d--xx", in which "xx" indicates a parameter ID. You can press the ▲ ▼ or SHIFT key to select a parameter ID. If you press the DATA/ENT key after the selection, the LED value places display the parameter value. Then you can press the PRG/ESC key to exit.

※ In monitoring mode, if no key acts within 1min, the speed feedback display or fault display interface in shortcut mode automatically appears.

Parameters in monitoring mode:

CODE	NAME	RANGE	UNIT
d00	Flow reference	[0,2400.0]	L/min
d01	Pressure reference	[0500,0]	bar
d02	System fault	System fault alarm(s)	
d03	Motor current	[0,900.0] (Valid value)	A
d04	AC voltage	[0,500]	Vrms
d05	DC voltage	[0800]	V
d06	Torque limit	[0,1800]	Nm
d07	Speed feedback	[-6000,6000]	Rpm
d08	Resolver feedback	[0,4096]	-
d09	Pressure feedback	[0,500]	bar
d10	Torque feedback	[-1800,1800]	Nm
d11	Running mode	3: Speed mode 4: Process mode	
d12	Motor temperature	[-52244]	℃
d13	Drive temperature	[-46244]	℃
d14	Ambient temperature	[-18114]	℃
d15	Machine information	[0999]	
d16	Software version (DSP)		
d17	Panel software		

CODE	NAME	RANGE	UNIT
	version		
d18	System max. pressure	[0500,0]	bar
d19	System max. flow	[0,2400.0]	L/min
d20	Power	[0.00,327.67]	kW
d21	Combining type	0: Single pump. 1: Hybrid. 2: Multiple pumps. 3: Multiple modes. 4: Communication with two models 5: Communication with four models	
d22	Actual PID step	[0,3]	
d23	Flow reference voltage	[0,10.00]	V
d24	Pressure reference voltage	[0,10.00]	V
d25	Pressure feedback voltage	[0,10.00]	V
d26	Output voltage	[-1000,1000]	V
d27	Digital input/output	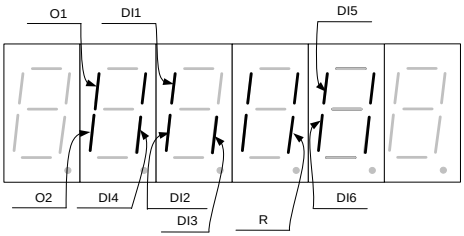 When the input signal is valid, the LED turns off. For example, when I1 has signal, the LED turns off; when I1 has no signal, the LED turns on (when S_ON input port indicator is on, it is high level). When the output signal is invalid, the LED turns on; when the output signal is valid, the LED turns off.	
d28	Motor configuration table version		
d29	Motor power	[-327.67,327.67]	kW
d30	Energy	[0999,9]	kW.h

CODE	NAME	RANGE	UNIT
	consumption for this run		
d31	Five low bits of accumulative power consumption	[0999,9]	kW.h
d32	Five high bits of accumulative power consumption	[0,9999]	1000 kW.h
d33	Motor power factor	[0,1.00]	

5.2.5 Setup mode

If you press the PRG/ESC key to select the setup mode, the LED value places display "F--xxx", in which "xxx" indicates a parameter ID. You can press the ▽ or SHIFT key to select a parameter ID. If you press and hold the DATA/ENT key and then release it, the LED displays the parameter value. If you press the SHIFT or △▽ key, the changeable places blink. If you want to modify a parameter, you can press the SHIFT key to move the blinking place and press the △ or ▽ key to change the value of the blinking place. After the value is modified, press and hold the DATA/ENT key and release it. Then the modification is automatically saved and blinking stops. If you press the SHIFT or △▽ key again at this time, you can modify the parameter again. The places which can be modified blink. Press the PRG/ESC key to exit.

Note: The drive, motor, and oil pump selection is different from other parameter selection.

Parameter setting flowchart:

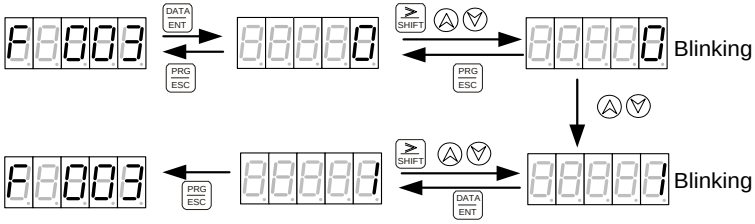

Note: For calibration commands, such as pressure linear zero calibration, after the setting: if the LED displays 0, the calibration succeeds; if the LED always displays 1, the calibration failed.

Drive setup flowchart:

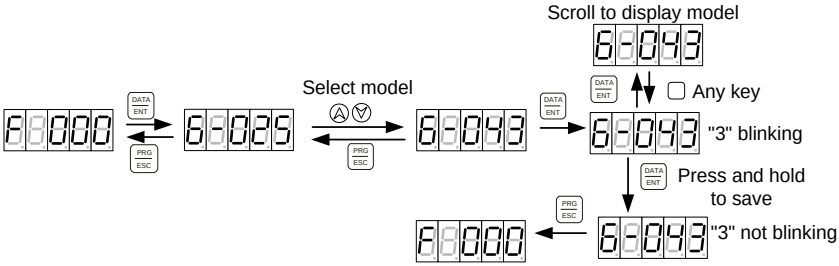

Motor setup flowchart:

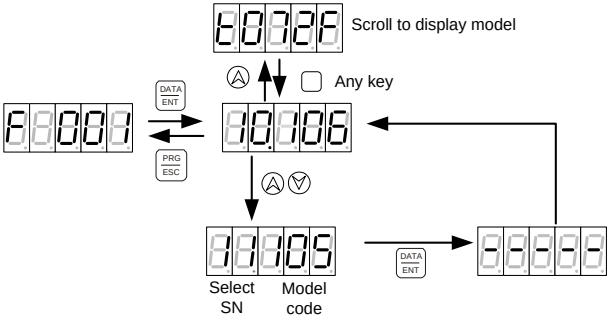

Select SN: sequence number for a motor model

Model code: digital code for a motor model

Oil pump setup flowchart:

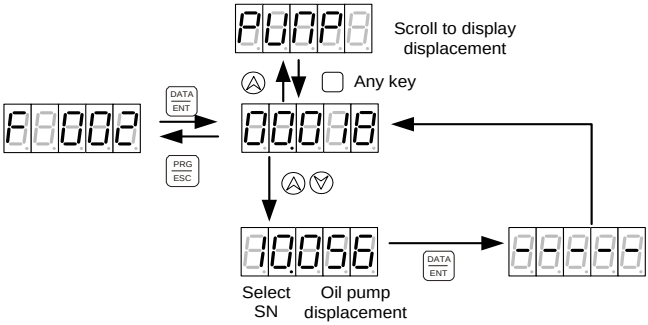

Select SN: sequence number for an oil pump model

In setup mode, if no key acts within 1min, the speed feedback display or fault display interface in shortcut mode automatically appears.

Table 5-1 Drive model table

Drive selection SN	LED display mode	Drive model	Drive model code
1	A-018	PH600.007.43ARSF	80
2	A-025	PH600.011.43ARSF	81
3	A-032	PH600.015.43ARSF	82
4	A-038	PH600.018.43ARSF	83
5	A-045	PH600.022.43ARSF	84
6	A-060	PH600.030.43ARSF	85
7	A-075	PH600.037.43ARSF	86
8	A-092	PH600.045.43ARSF	88
9	A-115	PH600.055.43ARSF	89
10	A-150	PH600.075.43BRSF	90
11	A-180	PH600.090.43BRSF	91
12	A-215	PH600.110.43BRSF	92

Table 5-2 Motor model table

Motor model	Motor model	Motor model	Model code
E01004F153	263	E01013F173	243
E01004F173	231	E01013F203	244
E01004F203	232	E01215F153	270
E01005F153	264	E01215F173	245
E01005F173	233	E01215F203	246
E01005F203	234	E01220F153	271
E01007F153	265	E01220F173	247
E01007F173	235	E01220F203	248
E01007F203	236	E01225F153	272
E01008F153	266	E01225F173	249
E01008F173	237	E01225F203	250
E01008F203	238	E01230F153	273
E01010F153	267	E01230F153	251
E01010F173	239	E01230F173	252
E01010F203	240	E01235F203	274
E01012F153	268	E01235F153	253
E01012F173	241	E01235F153	254
E01012F203	242	E01240F153	275
E01013F153	269		

Table 5-3 Oil pump model table

Oil pump selection SN	Oil pump model	Displacement mL/r	Default max. flow
0	PUMP 018 mL/r	18	40 L/min
1	PUMP 025 mL/r	25	55 L/min
2	PUMP 028 mL/r	28	62 L/min
3	PUMP 031 mL/r	31	68 L/min
4	PUMP 032 mL/r	32	70 L/min
5	PUMP 036 mL/r	36	79 L/min
6	PUMP 037 mL/r	37	81 L/min
7	PUMP 040 mL/r	40	88 L/min
8	PUMP 045 mL/r	45	99 L/min
9	PUMP 050 mL/r	50	110 L/min
10	PUMP 056 mL/r	56	123 L/min
11	PUMP 062 mL/r	62	136 L/min
12	PUMP 063 mL/r	63	139 L/min
13	PUMP 064 mL/r	64	141 L/min
14	PUMP 071 mL/r	71	142 L/min
15	PUMP 075 mL/r	75	150 L/min
16	PUMP 078 mL/r	78	156 L/min
17	PUMP 080 mL/r	80	160 L/min
18	PUMP 090 mL/r	90	180 L/min
19	PUMP 100 mL/r	100	200 L/min
20	PUMP 101 mL/r	101	202 L/min
21	PUMP 120 mL/r	120	240 L/min
22	PUMP 125 mL/r	125	250 L/min
23	PUMP 130 mL/r	130	260 L/min
24	PUMP 140 mL/r	140	280 L/min
25	PUMP 150 mL/r	150	300 L/min
26	PUMP 160 mL/r	160	320 L/min

Note: For dual-pump configuration, select the model with max. displacement.

Table 5-4 Parameters in the setup mode

Code	Definition	Range	Default	Unit
F000	Drive model selection	For details, see the drive model table.	Same as the drive nameplate	
F001	Motor model		07.062	

Code	Definition	Range	Default	Unit
	selection			
F002	Pump model selection	For details, see the oil pump model table.	19.100	
F003	Pressure feedback zero calibration	0: No calibration 1: Calibration	0	
F004	Pressure calibration mode	0: Straight line 1: Fold line	0	
F005	Flow calibration mode	0: Straight line 1: Fold line	0	
F006	Pressure calibration	0: Disable 1: Straight-line zero place 2: Straight-line scale range 3: Fold-line point 0 4: Fold-line point 1 5: Fold-line point 2 6: Fold-line point 3 7: Fold-line point 4 8: Fold-line point 5 9: Fold-line point 6 10: Fold-line point 7 11: Fold-line point 8 12: Fold-line point 9 13: Fold-line point 10 14: Fold-line point 11 15: Fold-line point 12	0	After the setting for straight-line zero place or scale range calibration, if the LED displays 0, the calibration succeeds; if the LED displays a non-zero value, the calibration failed. After the setting for fold-line calibration, if the LED displays the original value, the calibration succeeds; if the LED displays 1, the calibration failed.
F007	Flow calibration	0: Disable 1: Straight-line zero place 2: Straight-line scale range 3: Fold-line point 0 4: Fold-line point 1 5: Fold-line point 2	0	After the setting for straight-line zero place or scale range calibration, if the LED

Code	Definition	Range	Default	Unit
		6: Fold-line point 3 7: Fold-line point 4 8: Fold-line point 5 9: Fold-line point 6 10: Fold-line point 7 11: Fold-line point 8 12: Fold-line point 9 13: Fold-line point 10 14: Fold-line point 11 15: Fold-line point 12		displays 0, the calibration succeeds; if the LED displays a non-zero value, the calibration failed. After the setting for fold-line calibration, if the LED displays the original value, the calibration succeeds; if the LED displays 1, the calibration failed.
F008	Pressure filtering	[1,32]	6	Average sampling count of moving (1ms)
F009	Flow filtering	[1,32]	6	Average sampling count of moving (1ms)
F010	Full pressure scale range This value also determines the max. pressure. In addition, it also adjusts the pressure reference gain so that when the pressure reference input is 9.99V, the pressure reference corresponds to the recently set pressure	[1500]	175	bar

Code	Definition	Range	Default	Unit
	full scale range value.			
F011	Full flow scale range This value also determines the max. flow. In addition, it also adjusts the flow reference gain so that when the flow reference input is 9.99V, the flow reference corresponds to the recently set flow full scale range value.	[1,2400]	200	L/min
F012	Max. pressure	[0,500]	180	bar
F013	Max. flow	[0,2400]	200	L/min
F014	Speed proportional gain 0	[0,32767]	6000	
F015	Speed integral gain 0	[0,32767]	120	
F016	Pressure feedback gain	[0,32767]	8182	
F017	Pressure reference rise slope	[0,32767]	16000	0.007629 bar/ms
F018	Pressure reference fall slope	[0,32767]	16000	0.007629 bar/ms
F019	Pressure proportional gain 0	[0,32767]	13000	
F020	Pressure integral gain 0	[0,32767]	100	
F021	Reserved			
F022	Pressure proportional gain 1	[0,32767]	13000	
F023	Pressure integral gain 1	[0,32767]	100	
F024	Reserved			
F025	Pressure proportional gain 2	[0,32767]	13000	
F026	Pressure integral	[0,32767]	100	

Code	Definition	Range	Default	Unit
	gain 2			
F027	Reserved			
F028	Pressure proportional gain 3	[0,32767]	13000	
F029	Pressure integral gain 3	[0,32767]	100	
F030	Reserved	[0,32767]	0	
F031	Pump displacement	[0,32767]	100	mL/r
F032	Pump leakage	[0,1.00]	0.00	L/min/bar
F033	Max. speed for pump reverse run	[0,-6000]	-300	rpm
F034	Max. motor rotation speed	[0,6000]	2200	rpm
F035	DC voltage calibration	[0,800] (Only slight change allowed)	DC voltage at menu access	V
F036	AC voltage calibration	[0,800] (Only slight change allowed)	AC voltage at menu access	V
F037	Enabling base flow	0: No base flow 1: With base flow	1	
F038	Base flow pressure	[0500,0]	3.00	bar
F039	Base flow	[0327,67]	0.95	L/min
F040	Overshoot threshold	[5,50]	30	bar
F041	Motor rotation direction	0: Forward 1: Reverse	0	
F042	Resolver direction	0: Default direction 1: Opposite direction	0	
F043	Back pressure method	0: Manual 1: Automatic	0	
F044	Pressure sensor model selection	5V 10V 400bar	10V	
F045	Plunger pump model selection	0: Single displacement 1: Dual displacement	0	
F046	Pump displacement rate	[0,100.0]	20	%
F047	Wobble-disk switchover pressure	[0, 500.0]	195	bar

Code	Definition	Range	Default	Unit
	threshold			
F048	Displacement pressure judging delay	[0,32767]	100	ms
F049	DA1	0: Pressure reference 1: Pressure feedback 2: Flow reference 3: Flow feedback 4: Speed reference 5: Speed feedback 6: Torque reference 7: Torque feedback 8: Resolver feedback 9: DC voltage 10: Phase current 11: Fault word 1 12: Fault word 2 13: Communication command	1	
F050	DA1 max. value	[-32767,32767]	16384	
F051	DA1 min. value	[-32767,32767]	0	
F052	DA2	0: Pressure reference 1: Pressure feedback 2: Flow reference 3: Flow feedback 4: Speed reference 5: Speed feedback 6: Torque reference 7: Torque feedback 8: Resolver feedback 9: DC voltage 10: Phase current 11: Fault word 1 12: Fault word 2 13: Communication command	5	
F053	DA2 max. value	[-32767,32767]	16384	
F054	DA2 min. value	[-32767,32767]	-16384	

Code	Definition	Range	Default	Unit
F055	DA output	[-32767, 32767]	0	
F056	Rise delay of wobble-disk switchover	[0,32767]	10	ms
F057	Fall delay of wobble-disk switchover	[0,32767]	10	ms
F058	Speed switchover upper limit	[0,6000]	1200	rpm
F059	Speed switchover lower limit	[0,6000]	200	rpm
F060	Zero-place dead zone of flow reference	[0.00,100.00]	0.5	%
F061	Zero-place dead zone of pressure reference	[0.00,100.00]	0.5	%
F062	Zero-place dead zone of pressure feedback	[0.00,100.00]	0.0	%
F063	OUT2 conduction pressure coefficient	[0.00,100.00]	90.0	%
F064	Negative torque suppression control	0: Disable 1: Enable	0	
F065	Displacement switchover mode	0: Overvoltage 1: Over retaining-pressure	0	
F066	Restoring to default	0: Disable 1: Enable	0	
F067	Viewing fault records (displaying fault codes)	1: Fault 1 2: Fault 2 3: Fault 3 4: Fault 4 5: Fault 5 After the access, the LED displays the most recent fault (SN: 1). You can press the SHIFT key to display the previous fault (SN: 2). You can press the key to display the following information at a	Present fault code	

Code	Definition	Range	Default	Unit
		fault: DC voltage (V) 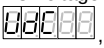, speed feedback (rpm) 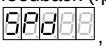, torque feedback (Nm) 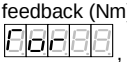, fault time (hour) , fault time (minute) 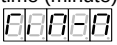, phase-A current (Apk) 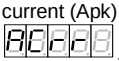, phase-B current (Apk) , motor current (A) , drive temperature (℃) , motor temperature (℃) , speed reference (rpm) 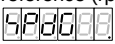, torque reference (Nm) 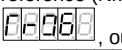, output voltage (V) 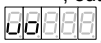, and fault type 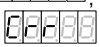		
F068	Writing parameters	Writing parameters Press and hold the DATA ENT key and then release it for access. Then the LED displays 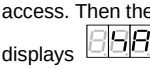. Press and hold the DATA ENT key and then release it to start parameter writing. Then the LED displays . If the writing succeeds, the LED	SAVE	

Code	Definition	Range	Default	Unit
		displays . If the writing failed, the LED displays .		
F069	Password for keypad unlocking	[0,99999]	00000	-
F070	Motor rated voltage	[0800]	351	V
F071	Motor rated current	[0900]	51	A
F072	Motor rated speed	[0,6000]	1467	rpm
F073	Motor rated frequency	[0600]	97.7	Hz
F074	Motor counter-emf	[0.0,800.0]	199.9	V/Krpm
F075	Motor temperature sensor type	0: NTC 1: PTC 2: KTY84 3: PT1000	3	
F076	Reserved			
F077	Reserved			
F078	Reserved			
F079	Pressure sensor scale range	[0, 500.0]	250.0	bar
F080	Pressure feedback adjustment coefficient	[50200]	100	%
F081	Min. value of flow reference	[0,2400.0]	0.0	L/min
F082	Enabling overmodulation	[0,1]	0	1: Enable
F083	Overmodulation rate	[100115]	105	%
F084	Carrier frequency	[4k,5k,8k,10k,3k,2k,6k]	3k	Hz
F085	Overload protection method	0: Current limiting 1: It protection 2–3: Reserved	0	
F086	Bus overvoltage protection@	[0,1000]	770	V
F087	Bus protection time	[0,30000]	20	5ms
F088	Bus overvoltage protection	[0,1000]	800	V
F089	Bus undervoltage	[0,1000]	380	V

Code	Definition	Range	Default	Unit
	protection@			
F090	Bus undervoltage protection @time	[0,30000]	150	5ms
F091	Bus undervoltage protection	[0,1000]	320	V
F092	Bus undervoltage protection for pipe opening	[0,1000]	315	V
F093	AC overvoltage protection@	[0,1000]	504	V
F094	AC overvoltage protection @time	[0,30000]	300	5ms
F095	AC overvoltage	[0,1000]	1500	V
F096	AC undervoltage protection@	[0,1000]	290	V
F097	AC undervoltage protection @time	[0,30000]	101	5ms
F098	AC undervoltage	[0,1000]	0	V
F099	Power-on timeout time	[0,30000]	2000	5ms
F100	Motor protection temperature	[0,500]	125	℃
F101	Module protection temperature	[0,500]	86	℃
F102	Air protection temperature	[0,500]	400	℃
F103	Overcurrent protection value	[0900]	018→61 025→70 032→110 038→110 045→140 060→200 075→240 092→290 115→380 150→480 180→500 215→562	A

Code	Definition	Range	Default	Unit
F104	Forward speed protection value	[0,6000]	2700	rpm
F105	Reverse speed protection value	[-6000,0]	-2700	rpm
F106	Overpressure protection threshold	[0, 500]	195	bar
F107	Pressure sensor fault value	[0,32767]	0	
F108	ACDC sampling error voltage	[0800]	80	V
F109	Braking resistance heating factor	[0,500]	018–045→35 060–215→40	
F110	Braking resistor cooling factor	[0,500]	1	
F111	Braking resistor overload threshold	[0,30000]	018–045→374 060–215→292	
F112	Motor short-circuit protection value	[0900]	10.0	A
F113	Protection against phase loss	0: Disable 1: Enable	0	
F114	Rectifier overload protection	0: Disable 1: Enable	0	
F115	Speed feedback filtering method	0: Moving average 1: Ordinary least squares You need to perform re-power on for the setting to take effect.	0	
F116	Low speed proportional gain	[0,32767]	7000	
F117	Low speed integral gain	[0,32767]	140	
F118	Low rotation speed of gain switchover	[0,6000]	5994	rpm
F119	High rotation speed of gain switchover	[0,6000]	5994	rpm
F120	Speed control rigidity	[1,14]	8	-
F121	Motor inertia	[0,0.655]	0.018	kgm^2
F122	Motor torque	[0100,00]	3.31	Nm/Arms

Code	Definition	Range	Default	Unit
	coefficient			
F123	Motor autotuning direction	0: Forward 1: Reverse	0	
F124	Drive rated power	[0.00,327.67]	018→7.50 025→11.00 032→15.00 038→18.00 045→22.00 060→30.00 075→37.00 092→45.00 115→60.00 150→75.00 180→90.00 215→110.00	kW
F125	Drive rated current	[0900]	018→18.0 025→25.0 032→32.0 038→38.0 045→45.0 060→60.0 075→75.0 092→92.0 115→115.0 150→150.0 180→180.0 215→215.0	A
F126	Torque limit	[0,1800]	400	Nm
F127	Disturbance compensation gain	[0200]	0	%
F128	Disturbance compensation filtering frequency	[0,5000]	500	Hz
F129	Disturbance compensation lagging period	[0,15]	5	Cycle (of speed loop)
F130	Overspeed protection time	[0,5000]	100	ms

Code	Definition	Range	Default	Unit
F131	Flow reference rise slope	[0,32767]	16000	0.07324 (L/min)/ms
F132	Flow reference fall slope	[0,32767]	16000	0.07324 (L/min)/ms
F133	Braking resistor fault detection	0: Disable 1: Enable	1	
F134	PWM voltage compensation	0: Disable 1: Enable	0	
F135	Pump stuck detection	0: Disable 1: Enable	1	
F136	Oil path depressurization mode	0: Common oil path 1: Self-depressurization oil path	0	
F137	Reverse torque upper limit	[0,100]	100	%
F138	Speed integral torque boost	[0,1000]	0	%
F139	Enabling multi-step PI of speed	0: Disable 1: Enable	0	
F140	Enabling multi-step PI of pressure	0: Disable 1: Enable	0	
F141	Speed proportional gain 1	[0,32767]	7000	
F142	Speed integral gain 1	[0,32767]	140	
F143	Speed proportional gain 2	[0,32767]	7000	
F144	Speed integral gain 2	[0,32767]	140	
F145	Speed proportional gain 3	[0,32767]	7000	
F146	Speed integral gain 3	[0,32767]	140	
F147	Self-depressurization startup speed	[-300300]	250	rpm
F148	Self-depressurization startup pressure	[0, 500]	59	bar
F149	Self-depressurization shutdown pressure	[0, 500]	57	bar
F150	Retaining-pressure	[-6000,6000]	100	rpm

Code	Definition	Range	Default	Unit
	feedforward cut-in speed			
F151	Retaining-pressure feedforward cut-in pressure	[0, 500]	200	bar
F152	Retaining-pressure feedforward gain	[0,32767]	0	
F153	Voltage in full pressure scale range	[0,11.00]	9.99	V
F154	Voltage in full flow scale range	[0,11.00]	9.99	V
F155	Resolver fault detection	0: Disable 1: Enable	1	
F156	PID terminal use purpose	0: General 1: Only for die-casting machines	0	
F157	DI1 input selection	0: No function 1: Fault reset 2: Enabling the drive 3: Selection of splitting or combining flow 4: Material storage signal input 5: Motor rotation direction 6: PID terminal 1 7: PID terminal 2 8: PID terminal 3 9: PID terminal 4 10: Trigger method selection 11: Enabling inclined-disk control (Over retaining-pressure method) 12: Inclined-disk switchover command 13: Pressure/flow control selection signal 14: Enabling unit follow-up	1	
F158	DI2 input selection		2	
F159	DI3 input selection		3	
F160	DI4 input selection		4	
F161	DI5 input selection		6	
F162	DI6 input selection		7	
F163	Reserved		0	
F164	Reserved		0	
F165	Reserved		0	
F166	Reserved		0	

Code	Definition	Range	Default	Unit
		15: Internal reference 1 16: Internal reference 2 17: Internal reference 3 18: Slave node address selection 1 19: Slave node address selection 2 20: Selection 1 of splitting or combining flow 21–63: Reserved		
F167	O1 output selection	0: No function 1: Servo readiness 2: Alarm output 3: I2 terminal status 4: Inclined-disk control output 5: Output of oil pressure being reached 6: Self-depressurization output 7–63: Reserved	1	
F168	O2 output selection		2	
F169	Reserved		0	
F170	R output selection		4	
F171	Reserved		5	
F172	Five low bits of accumulative power consumption	[0999,9]	0.0	kW.h
F173	Five high bits of accumulative power consumption	[0,9999]	0	1000 kW.h
F174	Enabling depressurization pressure PI	0: Disable 1: Enable	0	
F175	Proportion 0 of depressurization pressure drop P	[0,32767]	13000	
F176	Integral 0 of depressurization pressure drop P	[0,32767]	10	
F177	Proportion 1 of depressurization	[0,32767]	13000	

Code	Definition	Range	Default	Unit
	pressure drop P			
F178	Integral 1 of depressurization pressure drop P	[0,32767]	10	
F179	Enabling depressurization speed PI	0: Disable 1: Enable	0	
F180	Depressurization speed proportion 0	[0,32767]	6000	
F181	Depressurization speed integral 0	[0,32767]	50	
F182	Depressurization speed proportion 1	[0,32767]	6000	
F183	Depressurization speed integral 1	[0,32767]	50	
F184	High pressure difference 0 of gain switchover	[0,500]	0	bar
F185	Low pressure difference 0 of gain switchover	[0,500]	0	bar
F186	High pressure difference 1 of gain switchover	[0,500]	0	bar
F187	Low pressure difference 1 of gain switchover	[0,500]	0	bar
F188	Pressure proportion 0 with high pressure difference	[0,32767]	8000	
F189	Pressure integral 0 with high pressure difference	[0,32767]	50	
F190	Pressure proportion 1 with high pressure difference	[0,32767]	8000	
F191	Pressure integral 1 with high pressure	[0,32767]	50	

Code	Definition	Range	Default	Unit
	difference			
F192	Self-depressurization startup delay	[0,32767]	1	ms
F193	Self-depressurization shutdown delay	[0,32767]	2	ms
F194	Pressure at self-depressurization low-pressure switch-on	[0,500]	30	bar
F195	Pressure at self-depressurization low-pressure switch-off	[0,500]	20	bar
F196	Pressure forward overshoot suppression	[0,3000.0]	25.0	%
F197	Pressure reverse overshoot suppression	[0,3000.0]	100.0	%
F198	Multi-step flow fall slope 1	[0,32767]	16000	0.07324 (L/min)/ms
F199	Forward rotation depressurization method	0: One step 1: Two step 2: Three step	0	
F200	Depressurization step-2 pressure threshold	[0,500]	45	bar
F201	Depressurization step-3 pressure threshold	[0,500]	4	bar
F202	Depressurization step-2 fall slope	[0,32767]	125	0.007629 bar/ms
F203	Depressurization step-3 fall slope	[0,32767]	10	
F204	Multi-step depressurization pressure proportion	[0,32767]	9000	
F205	Multi-step depressurization pressure integral	[0,32767]	10	

Code	Definition	Range	Default	Unit
F206	Multi-step depressurization speed proportion	[0,32767]	6000	
F207	Multi-step depressurization speed integral	[0,32767]	50	
F208	Depressurization pressure PI fall threshold	[0,500]	7	bar
F209	Low-pressure reverse rotation speed limited	[-6000,6000]	-300	rpm
F210	Multi-step depressurization startup delay	[0,32767]	5	ms
F211	Multi-step depressurization end delay	[0,32767]	500	ms
F212	Enabling pressure-boost speed PI	0: Disable 1: Enable	0	
F213	Enabling depressurization bidirectional control	0: Disable 1: Enable	0	
F214	Voltage utilization in flux-weakening control	[10.0,195.0]	85.0	%
F215	Flux-weakening control switch	0: Calculation 1: Closed loop 2: Disable 3: Calculation + closed loop	3	
F216	Closed-loop flux-weakening bandwidth	[0,1000]	20	Hz
F217	Motor type	0: Surface-mounted PMSM 1: Salient pole PMSM	0	
F218	Flux-weakening depth of salient pole motor	[0,100]	50	%
F219	Motor rated power	[0.1,3000.0]	24.8	Kw
F220	Pole pairs of motor	[1,64]	4	p
F221	Pole pairs of encoder	[1,64]	1	p

Code	Definition	Range	Default	Unit
F222	D-axis inductance of synchronous motor 0	[0,327.67]	Model confirmation	mH
F223	D-axis inductance of synchronous motor 1	[0,327.67]	Model confirmation	mH
F224	D-axis inductance of synchronous motor 2	[0,327.67]	Model confirmation	mH
F225	Q-axis inductance of synchronous motor 0	[0,327.67]	Model confirmation	mH
F226	Q-axis inductance of synchronous motor 1	[0,327.67]	Model confirmation	mH
F227	Q-axis inductance of synchronous motor 2	[0,327.67]	Model confirmation	mH
F228	Back potential of synchronous motor 0	[0,3276.7]	Model confirmation	Vrms/1krpm
F229	Back potential of synchronous motor 1	[0,3276.7]	Model confirmation	Vrms/1krpm
F230	Back potential of synchronous motor 2	[0,3276.7]	Model confirmation	Vrms/1krpm
F231~F241	reserve			
F242	Pressure PI output filtering frequency 0	[0,800.0]	0	Hz
F243	Pressure PI output filtering frequency 1	[0,800.0]	0	Hz
F244	Pressure holding Low speed PI is enabled	[0,1]	0	
F245	The low-speed PI pressure for maintaining pressure is enabled	[0,1]	0	
F246	Low speed pressure	[0,32767]	2000	ms

Code	Definition	Range	Default	Unit
	PI cut delay time			
F247	Pressure holding low speed pressure proportional gain	[0,32767]	7500	
F248	Low speed pressure integral gain for holding pressure	[0,32767]	30	

5.2.6 Debug mode

If you press the PRG/ESC key to select the debug mode, the LED displays "h--xx", in which "xx" indicates a parameter ID. You can press the ▲ or ▼ key to select a parameter ID. When you press and hold the DATA/ENT key and then release it, the selection is completed. Then the LED displays the parameter value. If you want to modify a parameter, you can press the SHIFT key to move the blinking place and press the ▲ or ▼ key to change the value of the blinking place. After the value is modified, press and hold the DATA/ENT key and release it. Then the modification is automatically saved and blinking stops. If you press the DATA/ENT or ▲▼SHIFT key again at this time, you can modify the parameter again. The places which can be modified blink. Press the PRG/ESC key to exit.

Note: In debug mode, if no key acts within 1min, the speed feedback display or fault display interface in shortcut mode automatically appears.

Parameters in the setup mode:

Code	Definition	Range	Default	Unit
h00	Enabling run	0: Disable 1: Enable	Related to IO level enabling of drive	
h01	Enabling diagnosis	0: Disable 1: Enable	0	
h02	Diagnosis content (Valid only when diagnosis enabled)	0: Disable 1: Measure the initial angle 2: Enable jogging 3–5: Invalid 6: Drive test	0	
h03	Jogging (Valid only when diagnosis enabled)	▲: Jog forward ▼: Jog reversely	0	
h04	Control mode	3: Speed mode 4: Process mode	4	
h05	Speed reference (Valid in speed	Motor model related	0	rpm

Code	Definition	Range	Default	Unit
	control mode)			
h06	Process command mode	0: Digital input 1: Analog input 2: Continuous CAN communication input 3: Continuous RS485 communication input 4: CANopen communication input 5: EtherCAT communication input 6: Internal reference 7: PROFINET communication input	1	
h07	Flow reference (Process command mode is communication input)	[0, Max. flow]	0.0	L/min
h08	Pressure reference (Process command mode is communication input)	[0, Max. pressure]	0.0	bar
h09	Max. jogging speed	The motor runs at the max. speed when you press ⏶ or ⏷. [0,100]	15	rpm
h10	Resolver offset	[0,4095]	0	
h11	Motor parameter autotuning (Valid only when diagnosis enabled)	0: Disable 1: Dynamic 2: Static 1 3: Static 2	0	
h12	Enabling advanced parameter operation	11111: Disable 99999: Enable Other values: No functions	00000	
h13	Clearing faults	0: Disable. 1: Enable	0	
h14	Internal flow reference 0	[0，100.0]	0.0	%
h15	Internal flow reference 1	[0，100.0]	0.0	%
h16	Internal flow reference 2	[0，100.0]	0.0	%

Code	Definition	Range	Default	Unit
h17	Internal flow reference 3	[0，100.0]	0.0	%
h18	Internal flow reference 4	[0，100.0]	0.0	%
h19	Internal flow reference 5	[0，100.0]	0.0	%
h20	Reserved	[0，100.0]	0.0	
h21	Reserved	[0，100.0]	0.0	
h22	Internal pressure reference 0	[0，100.0]	0.0	%
h23	Internal pressure reference 1	[0，100.0]	0.0	%
h24	Internal pressure reference 2	[0，100.0]	0.0	%
h25	Internal pressure reference 3	[0，100.0]	0.0	%
h26	Internal pressure reference 4	[0，100.0]	0.0	%
h27	Internal pressure reference 5	[0，100.0]	0.0	%
h28	Speed integral torque boost 1	[0，100.0]	0.0	8%
h29	Speed proportional torque boost 1	[0，100.0]	0.0	8%
h30	Channel of running commands	0: Keypad 1: Terminal	1	

5.2.7 Multi-pump mode

If you press the PRG/ESC key to select the multi-pump mode, the LED displays "P--xx", in which "xx" indicates a parameter ID. You can press the ∧ ∨ or SHIFT key to select a parameter ID. When you press and hold the DATA/ENT key and then release it, the selection is completed. Then the LED displays the parameter value. If you want to modify a parameter, you can press the SHIFT key to move the blinking place and press the ∧ or ∨ key to change the value of the blinking place. After the value is modified, press and hold the DATA/ENT key and release it. Then the modification is automatically saved and blinking stops. If you press the DATA/ENT or ∧ ∨ SHIFT key again at this time, you can modify the parameter again. The places which can be modified blink. Press the PRG/ESC key to exit.

Note: In multi-pump mode, if no key acts within 1min, the speed feedback display or fault

display interface in shortcut mode automatically appears.

Code	Definition	Range	Default	Unit
P00	Enabling the network	0: Disable 1: Enable	0	
P01	Opening network pipes	0: Close 1: Open	Related to IO level enabling of drive	
P02	Combining type	0: Single pump 1: Hybrid 2: Multiple pumps 3: Multiple modes 4: Communication with two models 5: Communication with four models	0	
P03	Node No.	[0,15]	0	
P04	Slave count	[0,15]	0	
P05	Node type	0: Independent unit 1: Control unit 2: Follow-up unit 3: Flow-loop unit	0	-
P06	Flow switch-in threshold	[0100,0]	25.0	%
P07	Flow switch-in hysteresis upper limit	[0100,0]	5.0	%
P08	Flow switch-in hysteresis lower limit	[0100,0]	2.5	%
P09	Multi-pump pressure proportional gain 0	[0,32767]	8000	
P10	Multi-pump pressure integral gain 0	[0,32767]	88	
P11	Depressurization step-1 delay	[0,32767]	500	ms
P12	Multi-pump pressure proportional gain 1	[0,32767]	8000	
P13	Multi-pump pressure integral gain 1	[0,32767]	88	
P14	Speed proportional torque boost	[0,1000]	0	%
P15	Multi-pump pressure proportional gain 2	[0,32767]	8000	
P16	Multi-pump pressure integral gain 2	[0,32767]	88	

Code	Definition	Range	Default	Unit
P17	Quick depressurization coefficient	[0,32767] A greater value indicates quicker depressurization 0: Invalid	0	
P18	Multi-pump pressure proportional gain 3	[0,32767]	8000	
P19	Multi-pump pressure integral gain 3	[0,32767]	88	
P20	Depressurization overshoot suppression factor	[0,32767] A smaller value indicates greater suppression 0: Invalid	0	
P21	ECAT synchronization method	0: Run freely 1: Synchronization manager 2: Synchronization clock	0	
P22	ECAT synchronization time	0: 500μs 1: 1ms 2: 2ms 3: 4ms	0	
P23	RS485 communication address	[1,255]	10	
P24	RS485 communication parity method	0: (N,8,1) 1: (E,8,1) 2: (O,8,1) 3: (N,8,2) 4: (E,8,2) 5: (O,8,2) Note: N: No parity bit. E: Even parity. O: Odd parity. 8-bit data. 1 or 2 stop bits.	0	
P25	RS485 communication baud rate	0: 9600bps 1: 19200bps 2: 38400bps 3: 57600bps	1	
P26	CANOpen communication node No.	[1,127]	1	
P27	CANopen communication baud rate	0: 1000kbps 1: 500kbps 2: 250kbps 3: 125kbps	1	

<table>
<tr><th>Code</th><th>Definition</th><th>Range</th><th>Default</th><th>Unit</th></tr>
<tr><td></td><td></td><td>4: 50kbps
5: 20kbps</td><td></td><td></td></tr>
<tr><td>P28</td><td>Proportion 0 of depressurization pressure boost P</td><td>[0,32767]</td><td>8000</td><td></td></tr>
<tr><td>P29</td><td>Integral 0 of depressurization pressure boost P</td><td>[0,32767]</td><td>5</td><td></td></tr>
<tr><td>P30</td><td>Proportion 1 of depressurization pressure boost P</td><td>[0,32767]</td><td>8000</td><td></td></tr>
<tr><td>P31</td><td>Integral 1 of depressurization pressure boost P</td><td>[0,32767]</td><td>5</td><td></td></tr>
<tr><td>P32</td><td>Reserved</td><td>[0,32767]</td><td>6000</td><td></td></tr>
<tr><td>P33</td><td>Reserved</td><td>[0,32767]</td><td>5</td><td></td></tr>
<tr><td>P34</td><td>Slave-node address 1</td><td rowspan="4">LED display interface of slave node address function code setting: 
The ten thousands place specifies the group number, 0–3.
The ones, tens, hundreds, and thousands places specify the node number. See the following table.
<table><tr><th>Ten thousands place</th><th>Thousands place</th><th>Hundreds place</th><th>Tens place</th><th>Ones place</th></tr><tr><td>0.</td><td>Node 3</td><td>Node 2</td><td>Node 1</td><td>Node 0</td></tr><tr><td>1.</td><td>Node 7</td><td>Node 6</td><td>Node 5</td><td>Node 4</td></tr><tr><td>2.</td><td>Node 11</td><td>Node 10</td><td>Node 9</td><td>Node 8</td></tr><tr><td>3.</td><td>Node 15</td><td>Node 14</td><td>Node 13</td><td>Node 12</td></tr></table>Value meaning
0: Disable the digital address node to participate in control.
1: Enable the digital address node to participate in control.</td><td></td><td></td></tr>
<tr><td>P35</td><td>Slave-node address 2</td></tr>
<tr><td>P36</td><td>Slave-node address 3</td></tr>
<tr><td>P37</td><td>Slave-node address 4</td></tr>
<tr><td>P38</td><td></td><td></td><td></td><td></td></tr>
</table>

6 Commissioning

You can perform commissioning for the servo system by operating the embedded LED of the drive.

6.1 Pressure control commissioning

6.1.1 Flowchart

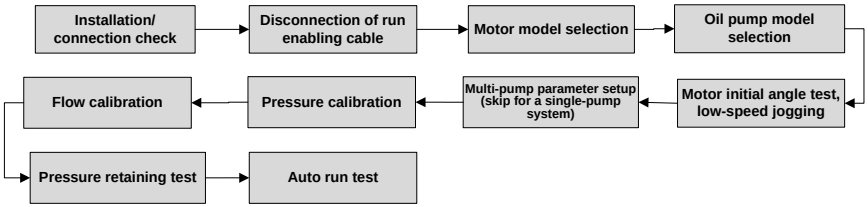

Figure 6-1 Commissioning flowchart

6.1.2 Commissioning procedure

The following describes how to perform commissioning for the servo system by operating the embedded LED.

6.1.2.1 Preparing

Check the installation and connection.

Before power on the drive, check the following items:

- Check the connection of each terminal and ensure that all screws for fixing are reliably locked and no slippage occurs.
- Ensure that the drive and the motor are properly grounded.
- After the drive is powered on, the LED displays the speed feedback  if the drive is in normal state.
- If a fault occurs, the LED displays the fault type 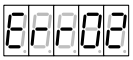.

6.1.2.2 Parameter initialization

Set F066 to 1. The drive parameters will be restored to the default settings, but the nameplate parameters of the drive and motor are not restored.

6.1.2.3 Motor model selection

Motor model selection method:

Press and hold the  keys together for 1 second. The LED value places display ULOCK, indicating that the drive keypad is unlocked.

If you use a motor in Table 5-2 Motor model table, select the model by setting F001.

If you use a motor exclusive from Table 5-2 Motor model table, set motor temperature sensor

F075 to the model used by the motor and set motor type F217 to the type of motor used.

For example: F075 = 2 (KTY84)

F217 = 1 (Salient pole PMSM)

6.1.2.4 Motor parameter autotuning

If you use a motor exclusive from Table 5-2 Motor model table, perform motor parameter autotuning first. The procedure is as follows:

1. Set motor parameters.

F070 = Motor rated voltage

F071 = Motor rated current

F072 = Motor rated speed

P073 = Motor rated frequency

F074 = Motor counter-emf or F122= Motor torque coefficient (Set either one of the two parameters.)

2. Motor parameter autotuning

Enable the diagnosis function. E13 = ON

Set motor parameter autotuning. E14 = 1, 2, 3

Parameters	Name	Description
E14	Motor parameter autotuning	0: Disable Motor parameter autotuning is disabled. 1: Dynamic It is used if the motor back-emf is not obtained, while the motor rotates at high speed during measuring. It is recommended to open the relief valve. With-load measuring affects the accuracy of motor parameter measuring and the control effect. In addition, high voltage is present in the oil path, which causes safety risks. 2: Static 1. If the motor back-emf has been obtained, but the motor does not rotate during measuring, you can perform the autotuning without opening the relief valve. 3: Static 2. If the motor back-emf has been obtained, but the motor runs at a low speed during measuring, you can perform the autotuning without opening the relief valve. In this mode, the system will automatically detect the motor wiring and modify the motor rotation direction.

When autotuning starts if the setup is completed, the LED displays "". When autotuning is completed, the LED displays "0".

If the drive reports an alarm during testing, find out the cause, handle the problem, and then

continue the autotuning.

6.1.2.5 Measure the motor initial angle.

If you have completed motor parameter autotuning, you do not need to measure the motor initial angle.

Set parameters on the LED: E04

When the initial angle measuring menu is accessed, the LED displays "READY". If you press and hold the DATA ENT key and then release it, the system automatically measures the initial angle, and the LED displays "-----", When the measuring is completed, the LED displays "OK".

6.1.2.6 Low-speed jogging

The test purpose is to check whether the basic functions of the servo system are normal.

1. Check and prepare for the running.

For the first run of the servo system, you must check whether the hydraulic loop connection and the servo system electrical connection are correct; whether the values of the oil pump displacement and working pressure are consistent with those on the nameplate. At the earlier period, adjust the system so that the oil discharged from the pump goes directly back to the tank, for example, by setting the overflow pressure of relief valve to the lowest.

2. Run at low speed with light load.

When the LED displays the E12 status, press and hold the DATA ENT key and then release it to enter the jogging mode. Then the LED displays "JOG". You can press and hold the ⋀⋁ key to make the motor accelerate to the max. forward or reverse jogging speed.

3. Confirm the working situation.

When you are sure that the motor runs forward, the pump rotates in the same direction as the arrow on the pump label; the noise and vibration are in the normal range and the pump can suck oil normally.

If the pump rotates in a direction different from the arrow on the pump label when the motor runs forward, modify the value of P042 to change the rotation direction of the motor.

6.1.2.7 Pressure and flow calibration

1. Zero-drift automatic correction

Set E26 to 1. The LED keypad displays "-FI-". Press the DATA ENT key and the analog input zero drift will be automatically corrected.

2. Flow and pressure settings

F010=System oil pressure, example: 175

F011=System flow, example: 200

F106=Pressure protection threshold (default: 195). If the system pressure exceeds 195, the default value should be changed.

3. Nominal flow and pressure reference calibration

Parameters	Name	Description
F153	Voltage in full pressure scale range	Max. voltage input for pressure reference
F154	Voltage in full flow scale range	Max. voltage input for flow reference

These parameters are used to set the corresponding relationship between flow and pressure command 0–10V and 0–system flow and system oil pressure.

4. Pressure feedback calibration

Parameters	Name	Description
F044	Pressure sensor model selection	5V: Sensor output range of 1–5V, measuring range of 0–200bar 10V: Sensor output range of 0–10V, measuring range of 0–250bar 400bar: Sensor output range of 0–10V, measuring range of 0–400bar
F079	Pressure sensor scale range	Set the pressure sensor scale range, corresponding to the pressure value of input voltage 5V or 10V.

Note: If the drive is operating in speed mode only, the system pressure setting, pressure feedback, and pressure reference calibration can be skipped.

6.1.2.8 Pressure retaining test

1. Restart the servo system.

After the system power is off, re-power on the system. The drive control permission is given to the device control computer. When the drive enters the run state (the RUN/TUNE indicator is on), perform the following tests.

2. Test of low pressure retaining

Maximize the overflow pressure of the relief valve before the following operations.

On the upper computer, set the flow reference to 10% and the pressure reference to 20bar. Check the oil path for leakage and check whether "Pressure feedback" and device-read pressure are 20bar.

3. Test of high pressure retaining

After the successful test of low pressure retaining, you can perform the test of high pressure retaining. Set the flow reference to 80% on the upper computer, and gradually increase the

pressure reference to max. pressure required. View "Pressure feedback" and "Speed feedback".

If the actual system pressure cannot reach the set pressure, check the oil path for leakage.

If the actual system pressure reaches the set pressure, but the motor average rotation speed is higher than the normal one, check whether:

- there is abnormal leakage in the oil pump;
- there is abnormal leakage in the hydraulic oil path;
- there is leakage in the relief valve;

Ensure the retained pressure and motor rotation speed at retaining meet requirements, and ensure the pressure fluctuation meets requirements according to the following table.

Measuring indicator	Expected result (recommended)
Pressure fluctuation (100% of pressure reference)	≤3bar

6.1.2.9 Calibration review

In the pressure retaining test, set the pressure reference to 10bar, 100bar, and full scale pressure on the host controller. Check whether the read data in the pressure table matches the setting. If not, perform pressure calibration again.

Set the flow reference to 5%, 50%, and 100% on the upper computer. Check whether the motor rotation speed and given flow are in a proportion. If not, perform flow calibration again.

6.1.2.10 Fully automatic run and system performance adjustment

1. Adjust the pressure/flow command filtering.

Increasing the pressure/flow filtering parameter value will reduce command fluctuation and slow down the command response.

Pressure/flow command filtering parameters:

Code	Definition	Range	Default	Unit
F008	Pressure filtering	[1,32]	6	Average sampling count of moving (1ms)
F009	Flow filtering	[1,32]	6	Average sampling count of moving (1ms)

Increasing the pressure/flow command rise speed will improve the oil pump output flow and oil pressure response, have greater impact on the run, and increase the overshoot; decreasing the speed will slow down the speed, and decrease the overshoot.

Pressure/flow command rise/fall parameters:

Code	Definition	Range	Default	Unit
F017	Pressure reference rise slope	[0,32767]	16000	0.007629 bar/ms
F018	Pressure reference fall slope	[0,32767]	16000	0.007629 bar/ms
F131	Flow reference rise slope	[0,32767]	16000	0.07324 (L/min)/ms

Code	Definition	Range	Default	Unit
F132	Flow reference fall slope	[0,32767]	16000	0.07324 (L/min)/ms

2. Set multi-step speed/pressure PI.

If the servo system uses stepped PI control in different working conditions, connect the digital input ports I5 (CN6-5) and I6 (CN6-6) as the indication signals of control stages, and then enable multi-step PI of speed/pressure. The following table lists the mapping between digital input signals and speed/pressure PI steps.

I6	I5	KP No.	KI No.
low	low	0	0
low	high	1	1
high	low	2	2
high	high	3	3

3. Adjust system performance.

The servo system uses the following gain parameters for oil pressure control. You can adjust the response characteristics and steady-state accuracy of the servo system by setting these parameters.

Speed PI adjustment:

Code	Definition	Setting	Range	Default
F139	Enabling multi-step PI of speed		0: Disable 1: Enable	0
E18 F014	Speed proportional gain 0	Increasing the speed proportional gain can improve the transient responsiveness of motor speed control, enhance the motor speed stability, and suppress interference, but setting the gain too great will cause oscillation.	[0,32767]	7000
F141	Speed proportional gain 1		[0,32767]	7000
F143	Speed proportional gain 2		[0,32767]	7000
F145	Speed proportional gain 3		[0,32767]	7000
E19 F015	Speed integral gain 0	Increasing the speed integral gain can improve the transient responsiveness of motor speed control, reduce the motor speed deviation, and increase speed overshoot, but setting the gain too great will cause oscillation.	[0,32767]	170
F142	Speed integral gain 1		[0,32767]	140
F144	Speed integral gain 2		[0,32767]	140
F146	Speed integral gain 3		[0,32767]	140

Pressure PI adjustment:

Code	Definition	Setting	Range	Default
F140	Enabling multi-step PI of pressure		0: Disable 1: Enable	0
Settings for the single-pump or flow splitting type:				
E16 F019	Pressure proportional gain 0	Increasing the pressure proportional gain can improve the transient responsiveness and stability of pressure control, suppress interference, and reduce pressure overshoot, but setting the gain too great will cause oscillation.	[0,32767]	13000
F022	Pressure proportional gain 1		[0,32767]	13000
F025	Pressure proportional gain 2		[0,32767]	13000
F028	Pressure proportional gain 3		[0,32767]	13000
E17 F020	Pressure integral gain 0	Increasing the pressure integral gain can improve the transient response speed of pressure control, reduce the pressure speed deviation, and increase pressure overshoot, but setting the gain too great will cause oscillation.	[0,32767]	100
F023	Pressure integral gain 1		[0,32767]	100
F026	Pressure integral gain 2		[0,32767]	100
F029	Pressure integral gain 3		[0,32767]	100
Settings for the the flow combining type:				
P09	Multi-pump pressure proportional gain 0	Increasing the pressure proportional gain can improve the transient responsiveness and stability of pressure control, suppress interference, and reduce pressure overshoot, but setting the gain too great will cause oscillation.	[0,32767]	8000
P12	Multi-pump pressure proportional gain 1		[0,32767]	8000
P15	Multi-pump pressure proportional gain 2		[0,32767]	8000
P18	Multi-pump pressure proportional gain 3		[0,32767]	8000
P10	Multi-pump pressure integral gain 0	Increasing the pressure integral gain can improve the transient response speed of pressure control, reduce the pressure speed deviation, and increase pressure overshoot, but setting the gain too great will cause oscillation.	[0,32767]	170
P13	Multi-pump pressure integral gain 1		[0,32767]	170
P16	Multi-pump pressure integral gain 2		[0,32767]	170
P19	Multi-pump pressure integral gain 3		[0,32767]	170

When the motor and pump model selection settings are completed, the drive automatically selects the values matching the motor and pump. If the system performance indicators do not meet requirements, adjust the preceding parameters.

The oil pressure control diagram of a single pump is shown as follows. The gain parameters that can be adjusted in the process mode are marked in the diagram.

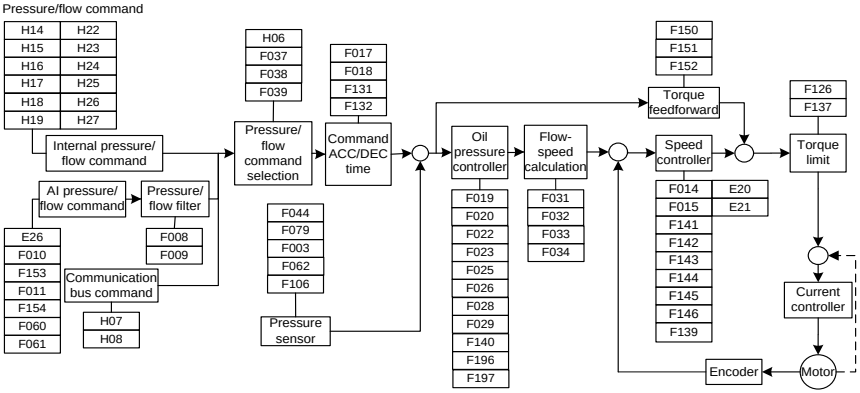

6.2 Speed mode commissioning

1. Complete procedures in 6.1.2.1–6.1.2.7.
2. P05=3 (Flow-loop unit) Speed mode
3. F160=5 (DI4 input selection) Motor rotation direction

Disconnect DI4 and 24-, forward running;

Connect DI4 and 24-, reverse running;

4. Commission the system performance according to 6.1.2.10 Fully automatic run and system performance adjustment. Adjust the flow and speed-related parameters only and keep the pressure-related parameters unchanged.

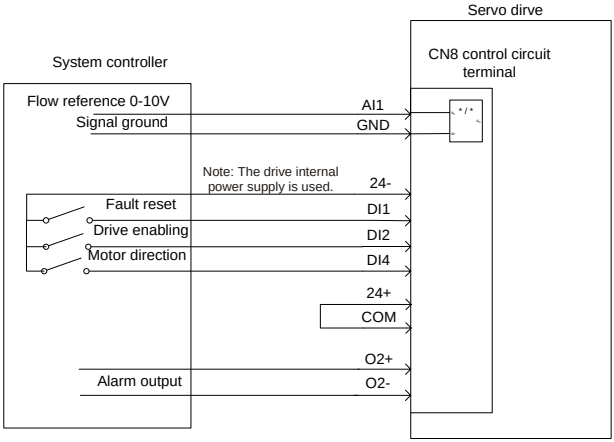

Figure 6-2 Control signal wiring in speed mode

7 Multi-pump combined flow control

For the hydraulic control of large tonnage injection molding machines, a single-pump system is far from being able to meet the flow requirements due to the limitation of pump displacement or motor power. Therefore, the outlets of multiple single-pump systems must be connected in parallel to achieve a large flow rate. In a combined-flow system, to improve the production efficiency and shorten the product process cycle, two or more actions need to be completed at the same time, the single-loop hydraulic system needs to be divided into double loops or three loops that are independently controlled. At split flow control, each loop independently completes the flow and pressure control. At combined flow control, a master drive is responsible for pressure control and total system flow control, while the other drives perform single-loop flow control by converting the total system flow commands to respective-loop flow commands. The total system output flow is the sum of the flow output of each loop.

7.1 Flow distribution method for multi-pump flow combining

You can add nodes for flow control to ensure that the output flow is linear within 0–100% of flow command.

Each node (or single-pump system) can carry a certain flow on its own, called the max. private flow.

Max. private flow = Node max. flow x Flow switch-in threshold ratio

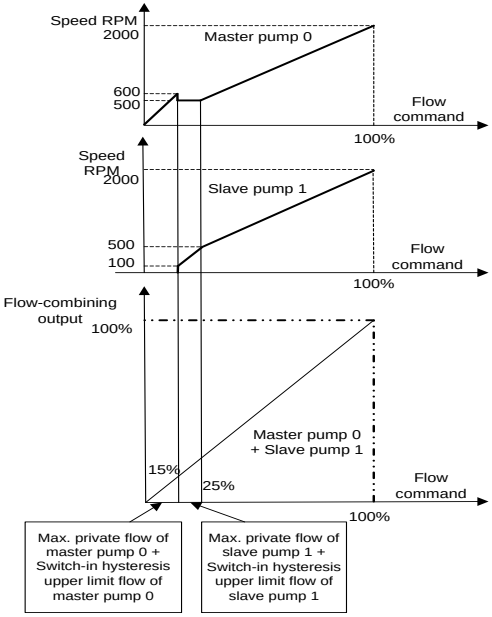

Figure 7-1 Slave pump responding to master node flow commands

For a total system flow reference command: When it is less than the max. private flow of master pump 0, master pump 0 carries all the system flow. When it is greater than the max. private flow of master pump 0, master pump 0 carries its own max. private flow, while the slave pumps carry the remaining flow. When the remaining flow is less than the max. private flow of slave pump 1, the remaining flow is carried by slave pump 1; when the remaining flow is greater than the max. private flow of slave pump 1, slave pump 1 carries its own max. private flow, and other slave pumps carry the other flow; and so on, until the remaining flow is completely carried. If the max. private flow of the last slave pump is less than the remaining flow, the system flow is equally (or proportionally) distributed to all pumps.

7.2 Multiple pumps

After the flow combining type of each node (or single-pump system) is set to the multi-pump mode, each node can only work in flow combining control, in which the master node is responsible for receiving pressure reference, flow reference, and run enabling signal from the upper control system and pressure sensor signal from system outlets to perform pressure and total system flow control. The slave nodes simply perform speed control based on the total system flow commands transmitted through CAN communication, which are converted into speed commands according to the flow distribution algorithm described above.

1. Multi-pump systematic diagram:

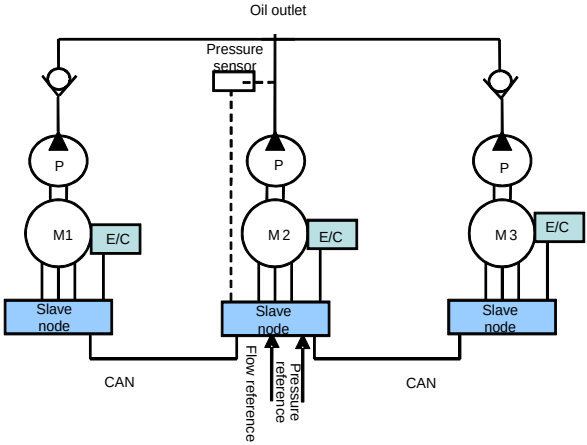

Figure 7-2 Multi-pump systematic diagram

2. Multi-pump systematic wiring diagram:

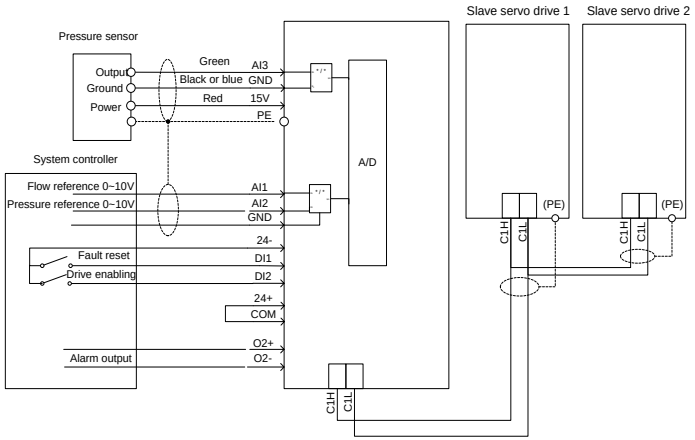

Figure 7-3 Multi-pump systematic wiring diagram

7.3 Hybrid

The system has two control modes: flow combining and splitting, with digital input I1 (C/D) signal to switch the control mode of each node. At flow splitting, each node is used as a single-loop hydraulic system to complete the flow and pressure control. At flowing combining, similar to the multi-pump method, the master node is responsible for pressure and total system flow control, while the slave nodes simply perform speed control based on the total system flow commands transmitted through CAN communication, which are converted into speed commands according to the flow distribution algorithm described above.

Hybrid method systematic diagram:

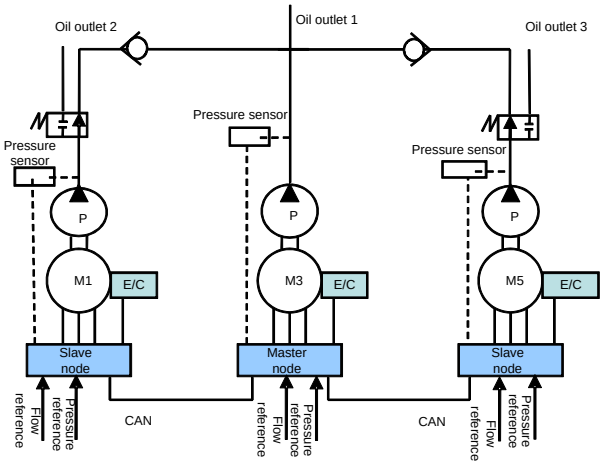

Figure 7-4 Hybrid method systematic diagram

7.4 Multiple modes

The hydraulic servo system consists of three nodes, of which each node consists of one or more single-pump systems. A single-pump system is called a control unit. A node consisting of one control unit is an independent unit node, while a multi-unit node consisting of multiple control units can be regarded as a node consisting of a dual or multiple pumps. A multi-unit node consists of a control unit and one or more following units. Each node has a pressure sensor connected to the control unit, while the control unit is connected to the upper control system through the AIN1 and AIN2 analog interfaces to receive pressure and flow reference signals. The two DA outputs of control unit connect to the analog inputs AIN1 and AIN2 of following unit to function as the motor speed reference signal and drive enabling signal. The RDY outputs of following unit are in serial connection, with the positive end connected to the 24V power supply, while the negative end connected to digital input port I7 of control unit, through which the control unit obtains the run status of following unit drive.

Each node uses the digital input signal I1(C/D) to switch the control mode. When I1(C/D) is high, the node works in flow combining state. When I1(C/D) is low, the node works in flow splitting state. When the system works in the flow combining state, the number of nodes with flow combined can be changed. The master node completes pressure control and total system flow control. The master and slave nodes run at the same speed in flow combing state. The flow distribution algorithm described earlier is not applicable to the multi-mode method. The control unit of each node controls the pressure and flow in flow splitting mode, and the following unit keeps the same speed as the control unit.

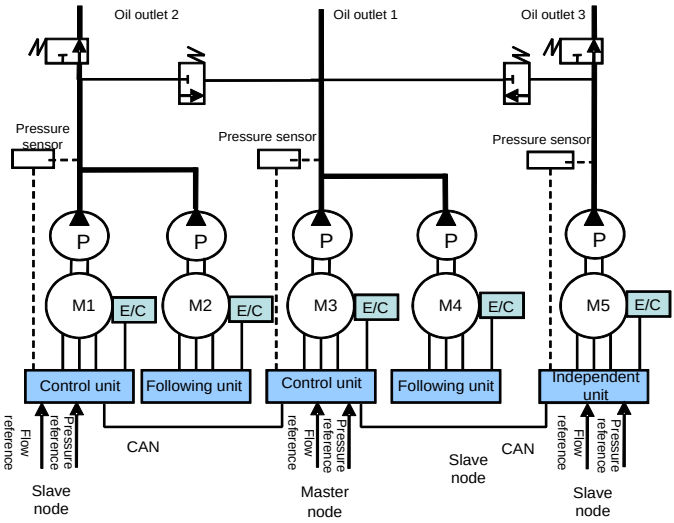

Figure 7-5 Multi-mode systematic diagram

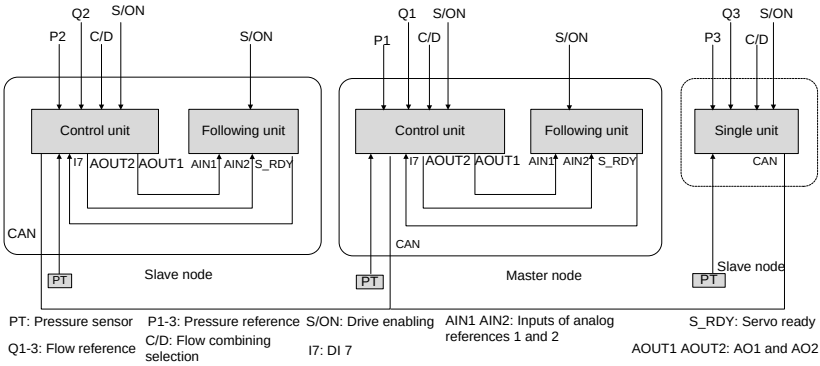

Figure 7-6 Hybrid and multi-mode wiring diagram

7.5 Communication with two models

In this mode, there is one master node (single-pump system), and multiple slave nodes (of which each is also a single-pump system). The master node controls which slave nodes combine flow through the flow splitting/combining selection terminal. There are two types of node combination.

Flow splitting/combining selection	CAN slave node address selection
Low	CAN slave-node address 1
High	CAN slave-node address 2

P34 (CAN slave-node address 1) and P35 (CAN slave-node address 2): used to select a slave node with the flow combined with the master node. Each is a 16-bit integer. A total of 15 slave nodes can be set. The value 1 of a bit indicates combining flow with the master node, while the value 0 indicates splitting flow and independent oil pump control. When the master node combines flow with slave nodes, bit 0 is 1; when the master node independently works, bit 0 is 0.

CAN slave-node address Range in hexadecimal format: 0x0000–0xffff Range in decimal format: 0–65535															
16-bit integer, with each bit corresponding to a node															
Bit15	Bit14	Bit13	Bit12	Bit11	Bit10	Bit9	Bit8	Bit7	Bit6	Bit5	Bit4	Bit3	Bit2	Bit1	Bit0
Slave node 15	Slave node 14	Slave node 13	Slave node 12	Slave node 11	Slave node 10	Slave node 9	Slave node 8	Slave node 7	Slave node 6	Slave node 5	Slave node 4	Slave node 3	Slave node 2	Slave node 1	Master node 0

Wiring diagram for communication with two models:

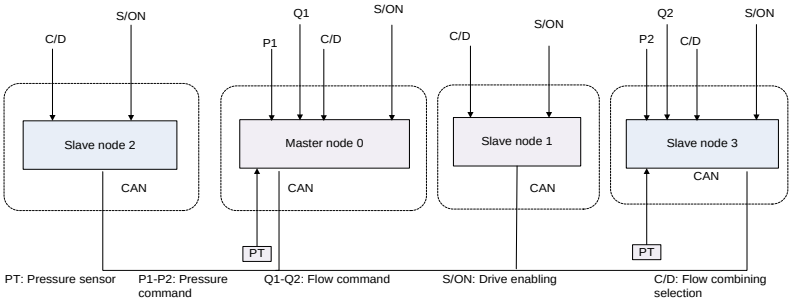

Figure 7-1 Wiring diagram for communication with two models

Example: The hydraulic system has four oil pumps, with the addresses set to 0, 1, 2, and 3. There may be two types of action combination:

Combination 1: Nodes 0, 1, and 2 combine the flow, while node 3 split the flow and serve as the master nodes.

The host controller provides all flow splitting/combining selection terminals from the low level to all the master and slave nodes. CAN slave node address selection: Address 1

P34 (CAN slave-node address 1) = 7 (0x0007)

Nodes 0, 1, and 2 combine the flow, while node 3 splits the flow and serves as the master node.

Combination 2: Nodes 0, 1, 2, and 3 combine the flow.

The host controller provides all flow splitting/combining selection terminals from the high level to all the master and slave nodes. CAN slave node address selection: Address 2

P35 (CAN slave-node address 2) = 15 (0x000f)

The four nodes combine the flow to work.

7.6 Communication with four models

In this mode, there is one master node (single-pump system), and multiple slave nodes (of which each is also a single-pump system). The master node controls which slave nodes combine flow through the flow splitting/combining selection terminal and the terminal of flow splitting/combining selection 1. There are four types of node combination.

Terminal of flow splitting/combining selection 1	Terminal of flow splitting/combining selection	CAN slave node address selection
Low	Low	CAN slave-node address 1
Low	High	CAN slave-node address 2
High	Low	CAN slave-node address 3
High	High	CAN slave-node address 4

P34, P35, P36, and P37 (CAN slave-node addresses 1, 2, 3, and 4): used to select a slave node with the flow combined with the master node. Each is a 16-bit integer. A total of 15 slave nodes can be set. The value 1 of a bit indicates combining flow with the master node, while the value 0 indicates splitting flow and independent oil pump control. When the master node combines flow with slave nodes, bit 0 is 1; when the master node independently works, bit 0 is 0.

CAN slave-node address Range in hexadecimal format: 0x0000–0xffff Range in decimal format: 0–65535															
16-bit integer, with each bit corresponding to a node															
Bit15	Bit14	Bit13	Bit12	Bit11	Bit10	Bit9	Bit8	Bit7	Bit6	Bit5	Bit4	Bit3	Bit2	Bit1	Bit0
Slave node 15	Slave node 14	Slave node 13	Slave node 12	Slave node 11	Slave node 10	Slave node 9	Slave node 8	Slave node 7	Slave node 6	Slave node 5	Slave node 4	Slave node 3	Slave node 2	Slave node 1	Master node 0

Wiring diagram for communication with four models:

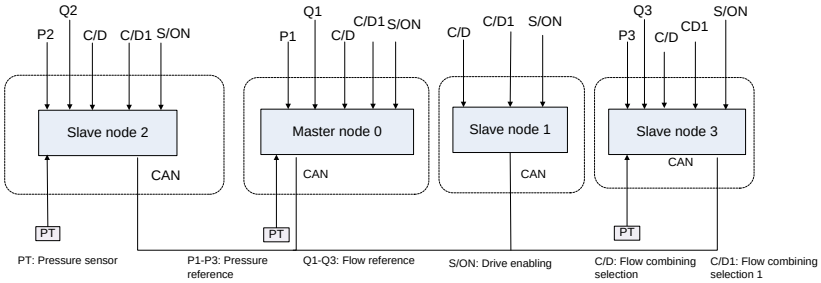

Figure 7-2 Wiring diagram for communication with four models

Example: The hydraulic system has four oil pumps, with the addresses set to 0, 1, 2, and 3. There may be four types of action combination:

Combination 1: Nodes 0 and 1 combine the flow, while nodes 2 and 3 split the flow and serve as the master nodes.

The upper computer provides the flow splitting/combining selection terminal from the low level to all nodes, and the low level connects to the terminal of flow splitting/combining selection 1. CAN slave node address selection: Address 1

P34 (CAN slave-node address 1) = 3 (0x0003)

Nodes 0 and 1 combine the flow, while nodes 2 and 3 split the flow and serve as the master nodes.

Combination 2: Nodes 0, 1, and 2 combine the flow, while node 3 splits the flow and serves as the master node.

The upper computer provides the flow splitting/combining selection terminal from the high level to all nodes, and the low level connects to the terminal of flow splitting/combining selection 1. CAN slave node address selection: Address 2

P35 (CAN slave-node address 2) = 7 (0x0007)

Nodes 0, 1, and 2 combine the flow, while node 3 splits the flow and serves as the master node.

Combination 3: Nodes 0, 1, and 3 combine the flow, while node 2 splits the flow and serves as the master node.

The upper computer provides the flow splitting/combining selection terminal from the high level to all nodes, and the low level connects to the terminal of flow splitting/combining selection 1. CAN slave node address selection: Address 3

P36 (CAN slave-node address 3) = 11 (0x000B)

Nodes 0, 1, and 2 combine the flow, while node 3 splits the flow and serves as the master node.

Combination 4: Nodes 0, 1, 2, and 3 combine the flow.

The upper computer provides the flow splitting/combining selection terminal from the high level to all nodes, and the low level connects to the terminal of flow splitting/combining selection 1. CAN slave node address selection: Address 4

P37 (CAN slave-node address 4) = 15 (0x000F)

The four nodes combine the flow to work.

Debug parameters for multi-node parallel connection control

Displayed code	Name	Description	Initial value	Unit
P00	Enabling the network	Indicates whether to enable the network. First, you need to debug the parameters used for the single pump type, flow splitting/combining selection, and node number for each node. For the master node, you need to set the number of slave nodes, the flow switch-in threshold, and the flow switch-in hysteresis upper limit and lower limit. Then, execute the network enabling command in a sequence from slave nodes to master nodes. 0: Disable 1: Enable	0	
P01	Opening network pipes	Controls whether to enable the drives of all nodes. Applicable to the muti-mode type. 0: Close 1: Open	0	
P02	Combining type	Selects the flow combining type. 0: Single pump 1: Hybrid 2: Multiple pumps 3: Multiple modes	0	
P03	Node No.	The node No. 0 indicates the master node. A node No. ranging from 1 to 15 indicates a	0	

Displayed code	Name	Description	Initial value	Unit
		slave node.		
P04	Slave count	When the node No. is 0, this parameter indicates the number of slave nodes connected to the master node.	0	
P05	Node type	Specifies the way the drive works in the node. 0: Independent unit 1: Control unit 2: Follow-up unit 3: Flow-loop unit	0	
P06	Flow switch-in threshold	Specifies the condition for a next pump to join the work. When the system flow exceeds the flow switch-in threshold of the working pump, a next pump is asked to join the work.	25	%
P07	Flow switch-in hysteresis upper limit	Specifies the condition for a next pump to join the work, used to prevent the pump from repeated startup and shutdown when the flow is at the threshold.	5	%
P08	Flow switch-in hysteresis lower limit	Specifies the condition for a next pump to join the work, used to prevent the pump from repeated startup and shutdown when the flow is at the threshold.	2.5	%
P09	Multi-pump pressure proportional gain 0	Step 0 of proportion parameter for multi-pump pressure PID control	8000	
P10	Multi-pump pressure integral gain 0	Step 0 of integral parameter for multi-pump pressure PID control	88	
P12	Multi-pump pressure proportional gain 1	Step 1 of proportion parameter for multi-pump pressure PID control	8000	
P13	Multi-pump pressure integral gain 1	Step 1 of integral parameter for multi-pump pressure PID control	88	
P15	Multi-pump pressure proportional gain 2	Step 2 of proportion parameter for multi-pump pressure PID control	8000	
P16	Multi-pump pressure integral gain 2	Step 2 of integral parameter for multi-pump pressure PID control	88	
P18	Multi-pump pressure proportional gain 3	Step 3 of proportion parameter for multi-pump pressure PID control	8000	

Displayed code	Name	Description	Initial value	Unit
P19	Multi-pump pressure integral gain 3	Step 3 of integral parameter for multi-pump pressure PID control	88	
P34	CAN slave-node address 1	Four slave-node addresses. Range: 0–65535	0	
P35	CAN slave-node address 2		0	
P36	CAN slave-node address 3		0	
P37	CAN slave-node address 4		0	

7.7 Multi-pump control mode settings

7.7.1 Pump model selection

If you use a pump in Table 5-3 Oil pump model table, select the model by setting E02. If you use a pump exclusive from the table, manually set pump parameters. Set F031.

7.7.2 Multi-pump parameter settings

1. Set the flow combining type.

Set P02 (Flow combining type).

0: Single pump. 1: Hybrid. 2: Multiple pumps. 3: Multiple modes. 4: Communication with two models 5: Communication with four models

2. Set node No.

Set P03 (Node No.).

3. Set P04 (Slave count).

Set the number of slave nodes. (It is mandatory for node 0; skip the operation for other nodes.)

4. Set multi-pump flow.

Set P06 (Flow switch-in threshold), which is usually set to 25%.

Set P07 (Flow switch-in hysteresis upper limit), which is usually set to 5%.

Set P08 (Flow switch-in hysteresis lower limit), which is usually set to 2.5%.

5. Set network enabling and network pipe opening.

Enable the network: In the sequence of from the slave to the master, set P00=1 to enable the network for the drive.

7.7.3 Flow calibration

When the combining type is multi-pump, the flow reference need to be recalibrated for the master node (main pump). At this time, the system max. flow is the sum of max. flow on each node and the full flow scale range cannot exceed this value.

Parameters	Name	Description
d19	System max. flow	It is zero for single pump. After the multi-pump flow combining network is enabled, the system max. flow is the sum of max. flow on each node.

1. Full flow scale range setting

F010=System max. flow, example: 500.0 L/min

Parameters	Name	Description
F010	Full pressure scale range	This value determines the full flow scale range. In addition, it also adjusts the flow reference gain so that when the flow reference input is 9.99V, the flow reference corresponds to the recently set flow full scale range value.

2. Nominal flow and pressure reference calibration

Parameters	Name	Description
F154	Voltage in full flow scale range	Max. voltage input for flow reference.

8 Troubleshooting

8.1 Display list for protection

The drive alarms with messages and protects against faults such as overvoltage and overcurrent. Once upon a fault occurs, the protection function is enabled, the drive stops output, and the motor stops running. Please view the displayed content to find out the cause and remove the faults. Fault records are stored in the internal memory of drive. The memory always show information and generation time of the last five faults, which can be viewed through the LED panel. The fault codes are listed in the following table. If the working condition is not improved after fault handling, contact our local dealer or service personnel.

Code	Name	Definition	Code	Name	Definition
Err01	IPM fault	Short-circuit current goes through the power module transiently.	Err02	Overcurrent	The output current exceeds the allowed working current of drive.
Err03	DC overvoltage	The DC voltage on the main circuit is abnormally high.	Err04	DC undervoltage	When the motor is powered on to run, the DC voltage on the main circuit decreases lower than the protection value.
Err05	FWD overspeed	The motor rotation speed exceeds the forward speed protection value.	Err06	Module overtemperature	The drive temperature exceeds the module protection temperature.
Err07	Motor overtemperature	The motor temperature exceeds the motor protection temperature.	Err08	Software fault	The drive software runs abnormally.
Err09	CAN fault	The drive reports the fault upon a CAN communication exception when the process command mode is continuous CAN communication input or multi-pump joint application.	Err10	Reserved	
Err11	Self-check fault	The internal hardware of drive is abnormal.	Err12	Task re-entry	An error occurred when invoking a software program.
Err13	System	The system pressure	Err14	REV overspeed	The motor rotation

Code	Name	Definition	Code	Name	Definition
	overpressure	exceeds the overpressure protection threshold.			speed exceeds the reverse speed protection value.
Err15	Pressure sensor fault	The pressure sensor is incorrectly wired or damaged.	Err16	Braking pipe fault	The braking pipe is damaged.
Err17	AC overvoltage	The input AC voltage exceeds AC overvoltage protection@	Err18	EEPROM error	There is a drive EEPROM data exception.
Err19	Reserved		Err20	AC undervoltage	The input AC voltage is lower than AC undervoltage protection@
Err21	Braking resistor overload	The braking resistor overload rate exceeds the braking resistor overload threshold.	Err22	Node fault	In multi-pump parallel connection application, if a slave node encounter a fault, the master drive reports it.
Err23	Input phase loss	Input phase loss occurs or three phases are unbalanced.	Err24	Reserved	
Err25	RS485 communication fault	The drive encounters an RS485 communication exception when the process command mode is continuous RS485 communication input.	Err26	Current feedback channel fault	The zero drift in power-on self-check is too great.
Err27–Err32	Reserved		Err33	Resolver sampling fluctuation fault	When the drive is tested in diagnosis mode, the resolver sampling value fluctuates greatly.
Err34	Phase-A current sampling fluctuation fault	When the drive is tested in diagnosis mode, the phase-A current sampling value fluctuates	Err35	Phase-B current sampling fluctuation fault	When the drive is tested in diagnosis mode, the phase-B current sampling

Code	Name	Definition	Code	Name	Definition
		greatly.			value fluctuates greatly.
Err36	Phase-A current sampling zero drift fault	When the drive is tested in diagnosis mode, the phase-A current sampling zero drift is too great.	Err37	Phase-B current sampling zero drift fault	When the drive is tested in diagnosis mode, the phase-B current sampling zero drift is too great.
Err38	DC voltage sampling fluctuation fault	When the drive is tested in diagnosis mode, the DC voltage sampling value fluctuates greatly.	Err39	Pressure feedback sampling fluctuation fault	When the drive is tested in diagnosis mode, the pressure feedback sampling value fluctuates greatly.
Err40	Pressure feedback sampling zero drift fault	When the drive is tested in diagnosis mode, the pressure feedback sampling zero drift is too great.	Err41	Pressure reference sampling fluctuation fault	When the drive is tested in diagnosis mode, the pressure reference sampling value fluctuates greatly.
Err42	Flow reference sampling fluctuation fault	When the drive is tested in diagnosis mode, the flow reference sampling value fluctuates greatly.	Err43	Reserved	
Err44	Module temperature sampling fluctuation fault	When the drive is tested in diagnosis mode, the module temperature sampling value fluctuates greatly.	Err45	Motor temperature sampling fluctuation fault	When the drive is tested in diagnosis mode, the motor temperature sampling value fluctuates greatly.
Err46–Err48	Reserved		Err49	Encoder initial angle measuring fault	During motor parameter autotuning in diagnosis mode, a fault occurs in the encoder initial angle measuring, for example, current does not follow, and

Code	Name	Definition	Code	Name	Definition
					timeout occurs.
Err50	Phase sequence detection fault	During motor parameter autotuning in diagnosis mode, the number of motor pole pairs is calculated incorrectly, the rotation speed limit value is invalid, current does not follow, or timeout occurs.	Err51	Motor resistance test fault	During motor parameter autotuning in diagnosis mode, current does not follow, timeout occurs, or the resistance test value is invalid.
Err52	Motor parameter dynamic test fault	During motor parameter autotuning in diagnosis mode, the speed deviation is too great, current does not follow, the load is too great, timeout occurs, or the test value is invalid.	Err53	Motor parameter static test fault	During motor parameter autotuning in diagnosis mode, the motor parameter calculation result is invalid.
Err54	Diagnosis interrupted	If a fault occurs during diagnosis, the drive terminates the diagnosis and displays "Err54".	Err55	Reserved	
Err56	EtherCAT initialization fault	The EtherCAT chip is in poor contact.	Err57	EEPROM fault in EtherCAT communication	The EEPROM does not have data or it fails to read data.
Err58	EtherCAT disconnection	After the drive is enabled, the network cable is not inserted properly, or the EtherCAT master node does not run properly.	Err59	EtherCAT communication fault	No PDO data is received after the drive has been enabled for a period of time.

8.2 Fault handling flowcharts

Err01: IPM fault

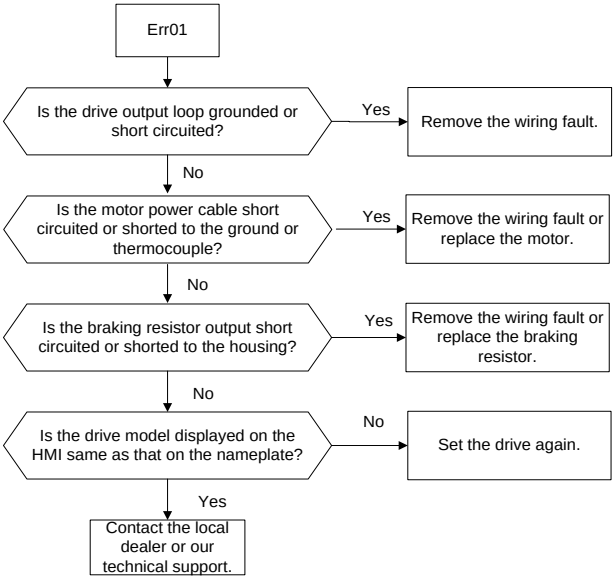

Err02: Overcurrent

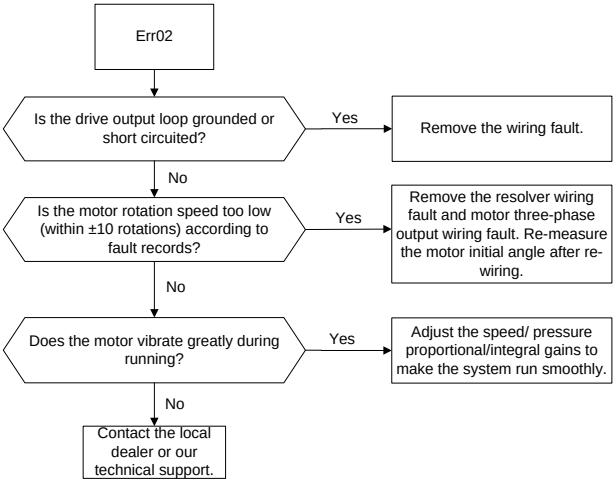

Err03: DC overvoltage

Err17: AC overvoltage

Err23: Input phase loss

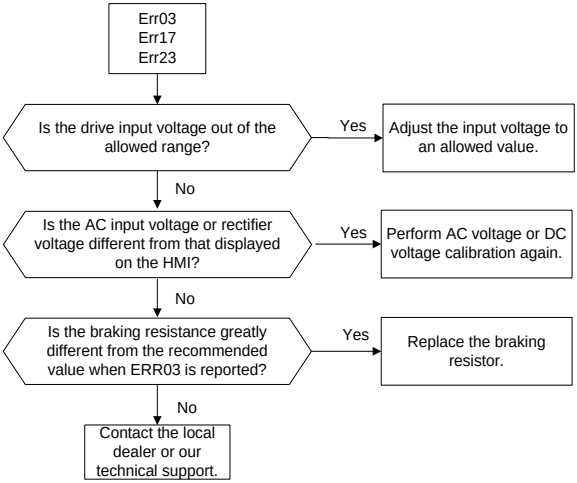

Err04: DC undervoltage

Err20: AC undervoltage

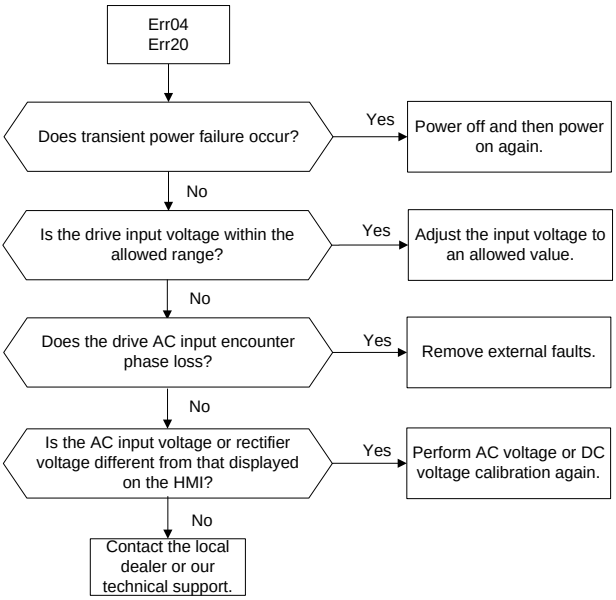

Err05: FWD overspeed

Err14: REV overspeed

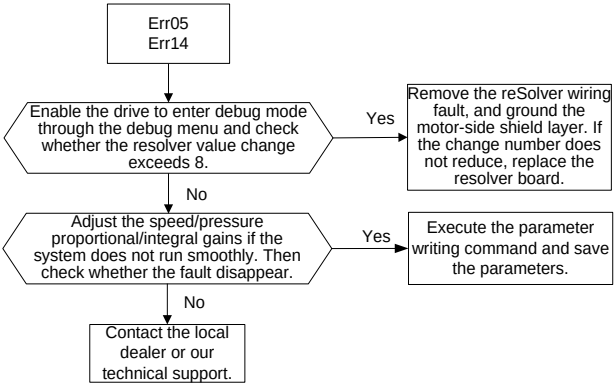

Err06: Module overtemperature

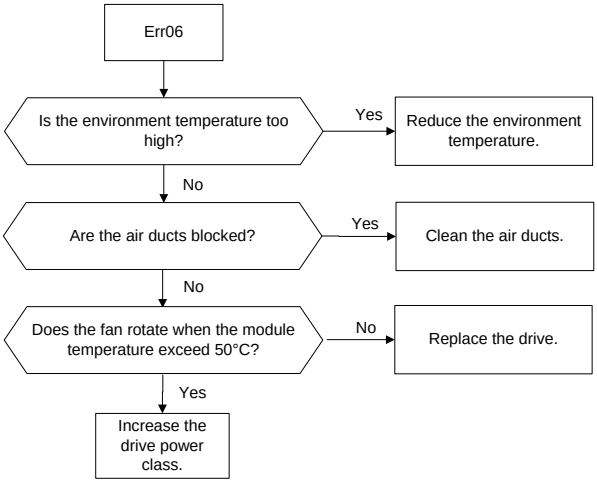

Err07: Motor overtemperature

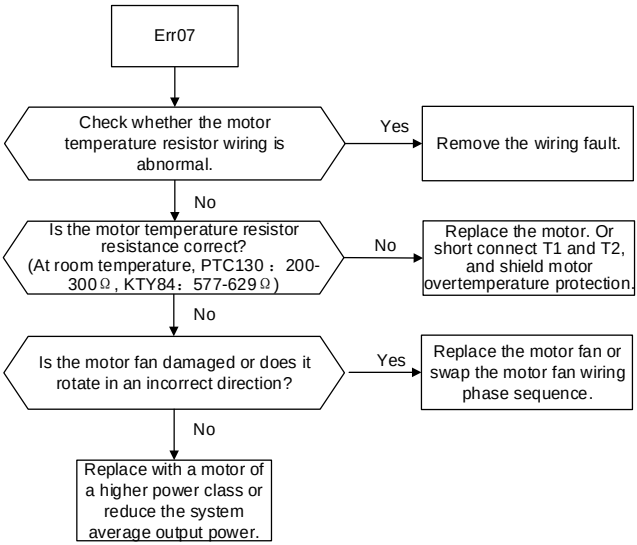

Err08: Software fault

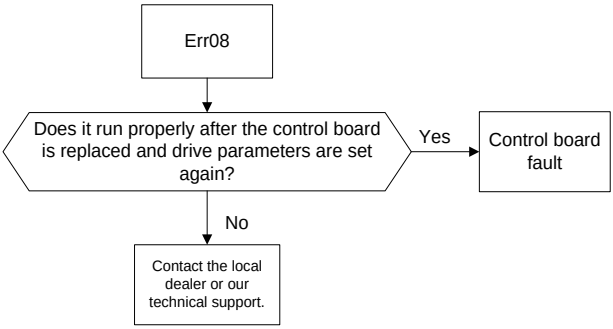

Err09: CAN fault

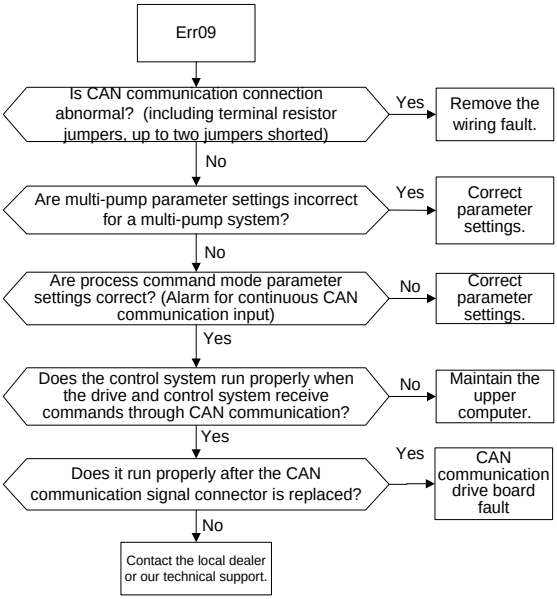

Err11: Self-check fault

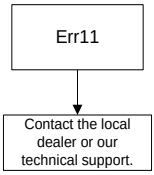

Err12: Task re-entry

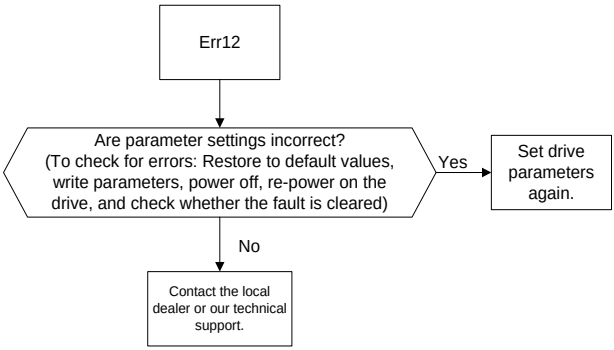

Err13: System overpressure

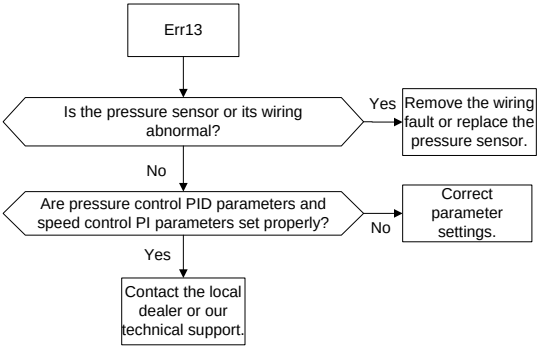

Err15: Pressure sensor fault

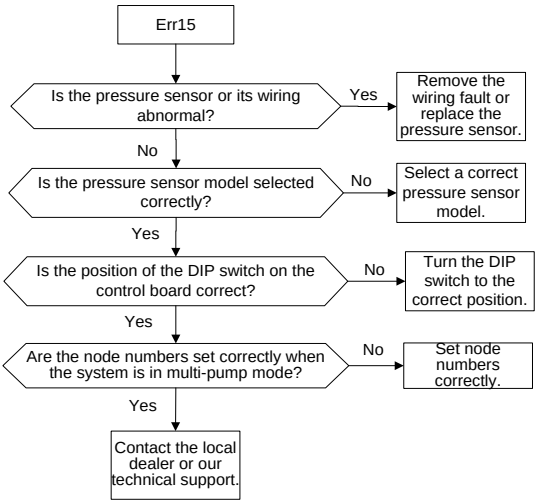

Err16: Braking pipe fault

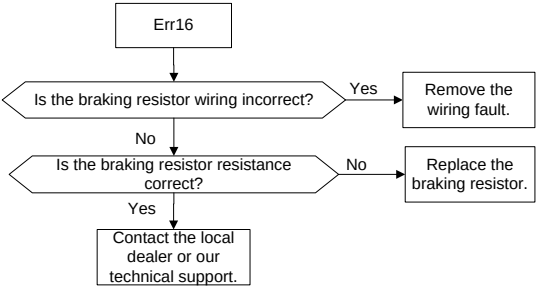

Err18: EEPROM error

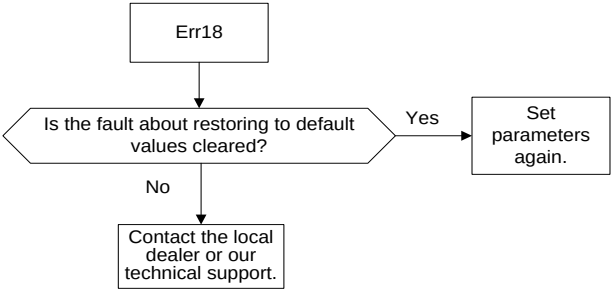

Err21: Braking resistor overload

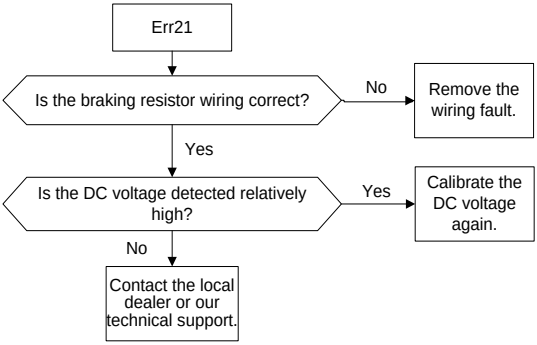

Err22: Node fault

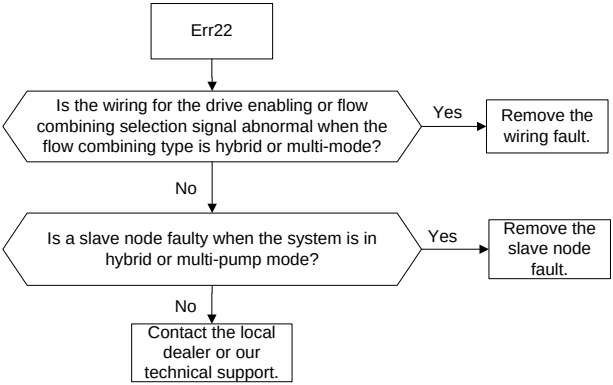

Err25: RS485 communication fault

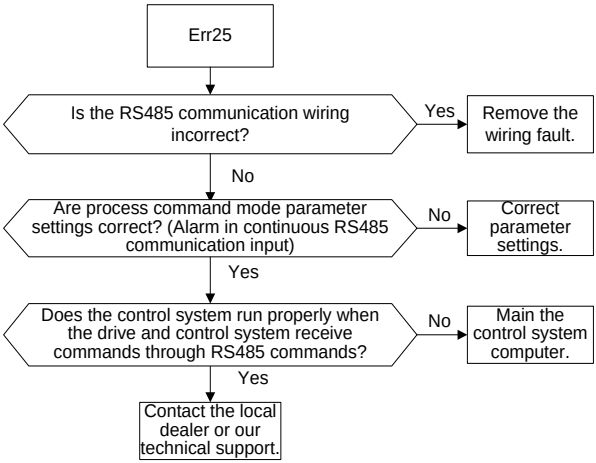

Err26: Current feedback channel fault

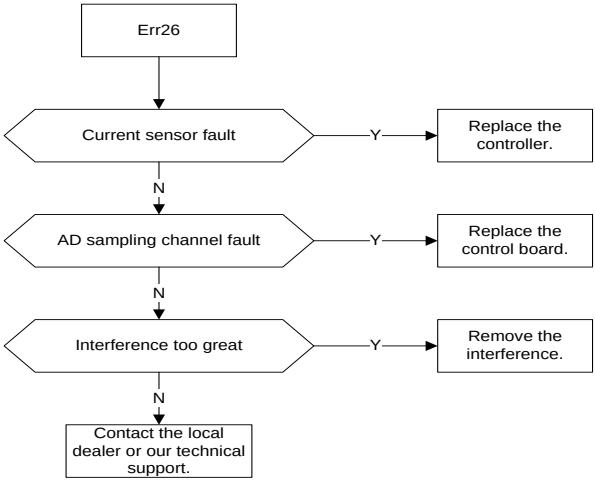

Err33: Resolver sampling fluctuation fault

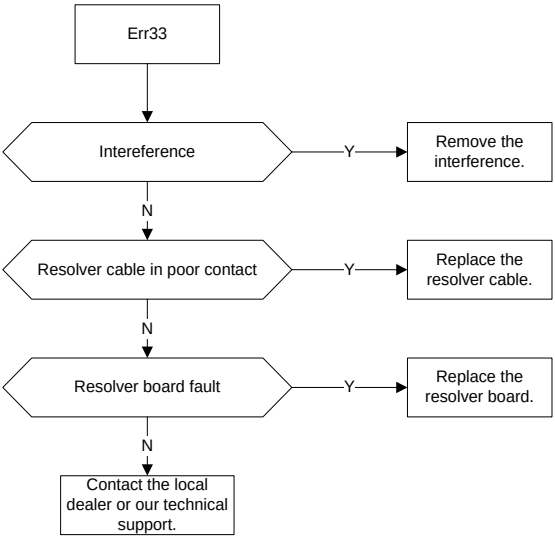

Err34: Phase-A current sampling fluctuation fault

Err35: Phase-B current sampling fluctuation fault

Err36: Phase-A current sampling zero drift fault

Err37: Phase-B current sampling zero drift fault

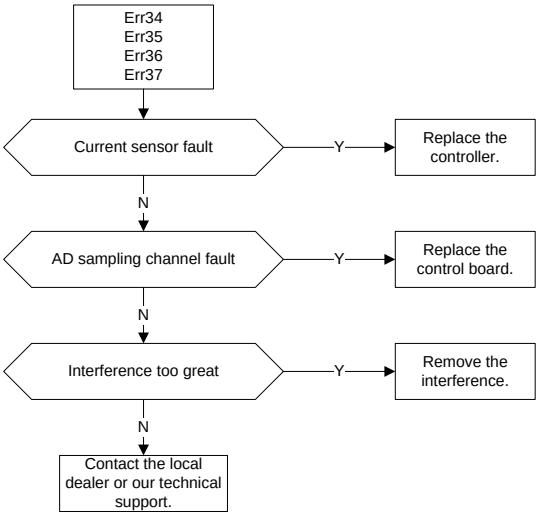

Err38: DC voltage sampling fluctuation fault

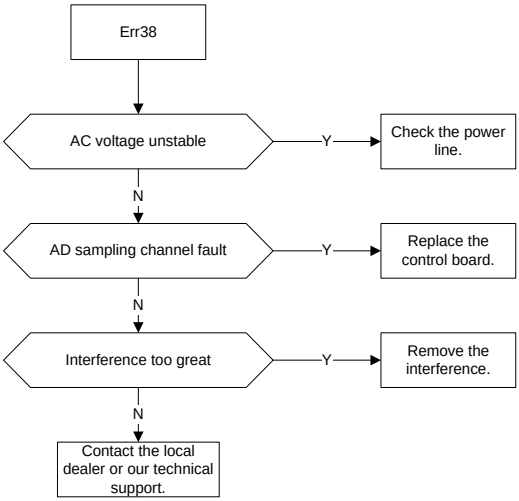

Err39: Pressure feedback sampling fluctuation fault

Err40: Pressure feedback sampling zero drift fault

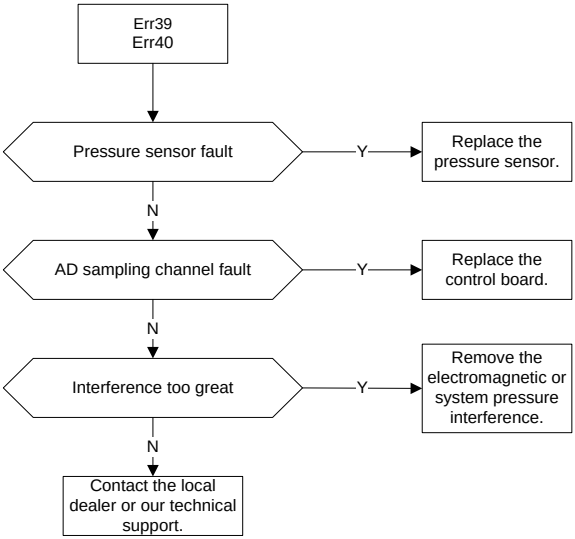

Err41: Flow reference sampling fluctuation fault

Err42: Pressure reference sampling fluctuation fault

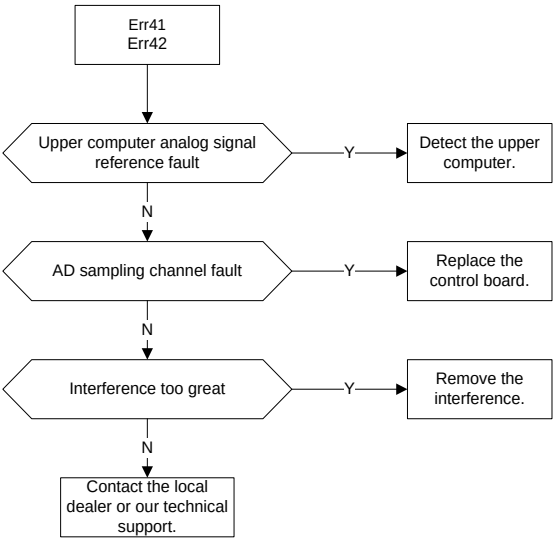

Err44: Module temperature sampling fluctuation fault

Err45: Motor temperature sampling fluctuation fault

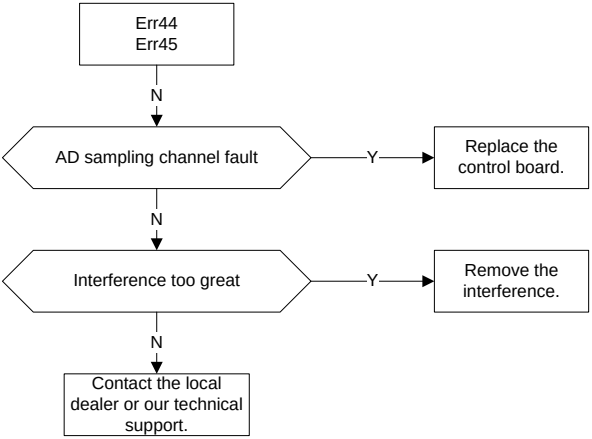

Err49: Encoder initial angle measuring fault

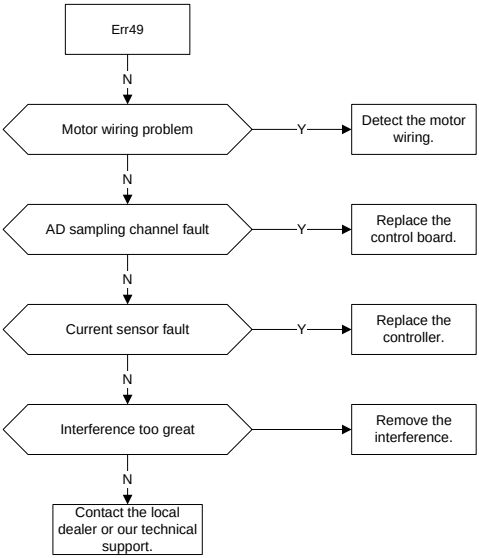

Err50: Phase sequence detection fault

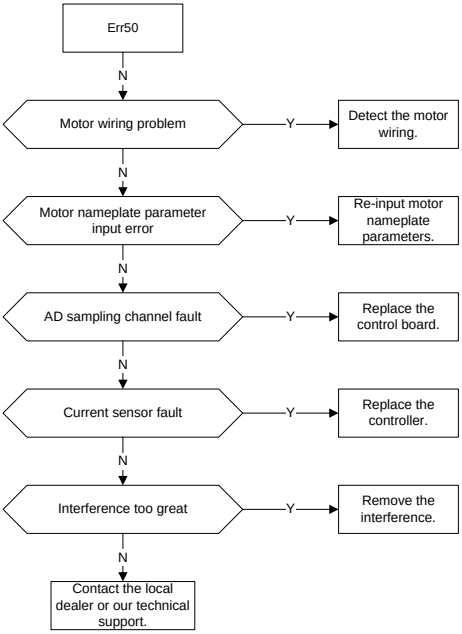

Err51: Motor resistance test fault

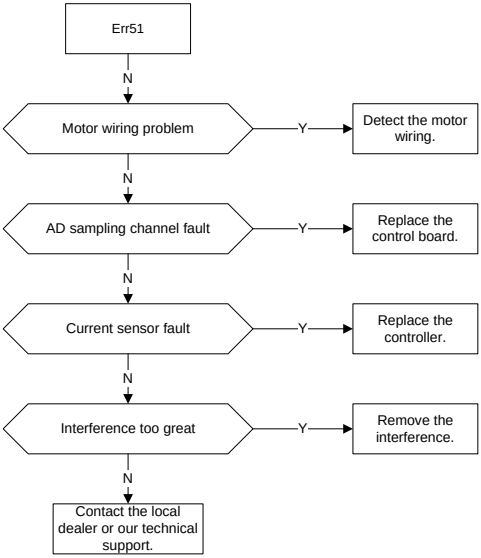

Err52: Motor parameter dynamic test fault

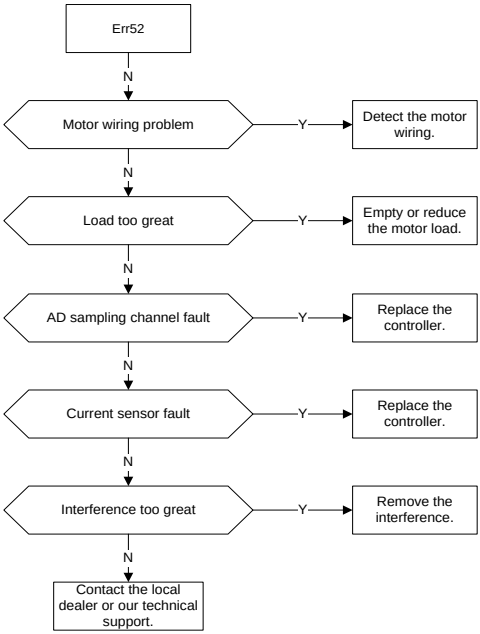

Err53: Motor parameter static test fault

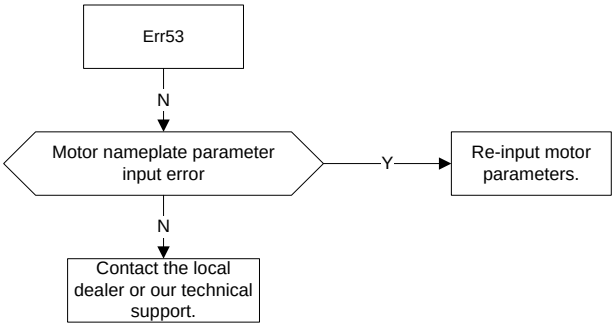

Err54: Diagnosis interrupted

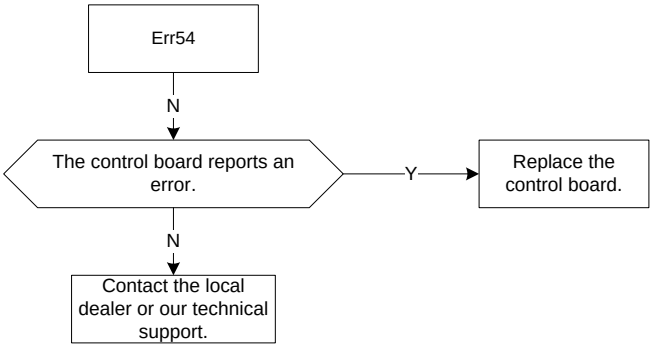

Err56: EtherCAT initialization fault

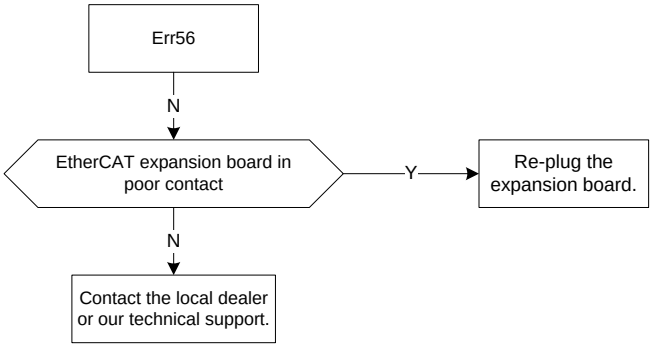

Err57: EEPROM fault in EtherCAT communication

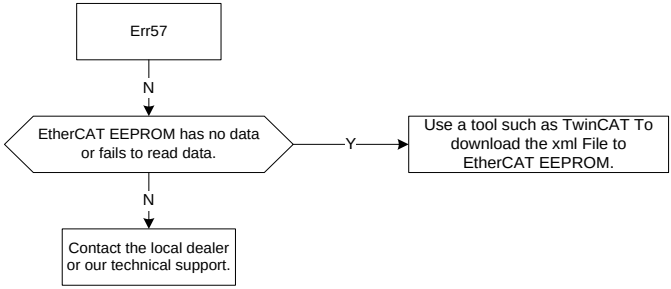

Err58: EtherCAT disconnection

Err59: EtherCAT communication fault

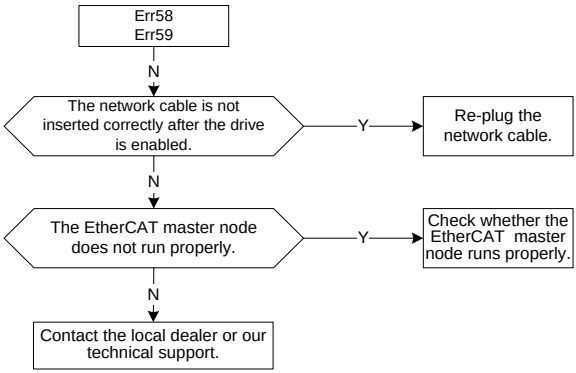

8.3 Common faults and solutions

The following table lists the common faults that the servo may encounter and the solutions.

No.	Fault	Possible cause	Solution
1	No display at power-on	● Drive power input in poor condition. ● Loose connection between the drive board and control board. ● Internal drive component fault.	● Check the input power ● Remove and insert the connection wires. ● Ask for manufacturer service.
2	Drive DI terminal invalid	● Loose DI terminal wires. ● Incorrect parameter settings. ● Loose short contact tag of J1 and J2, or incorrect internal or external power supply selected. ● Control board terminal fault.	● Remove and insert the connection wires. ● Check and set parameters correctly. ● Ensure the short contact tag is in good contact and the short connection method is correct. ● Ask for manufacturer service.
3	Motor not rotate as drive runs	● Resolver wires in poor contact. ● Motor damaged or stalled. ● Incorrect drive parameter settings.	● Perform correct wiring. ● Replace the motor or check for mechanical faults. ● Check and set drive parameters correctly.
4	Overcurrent fault	● Abnormal motor wiring (wire damage or loose connection). ● Incorrect parameter settings. ● Load fluctuation or oil pump damage. ● Abnormal position sensor	● Correct motor wiring. ● Set overcurrent parameters properly. ● Calibrate the load system and oil system again. ● Correct position sensor wiring.

No.	Fault	Possible cause	Solution
		wiring (wire damage or loose connection). ● Drive fault.	● Replace the faulty drive.
5	Overvoltage fault	● AC input power voltage too high. ● Incorrect parameter settings. ● Braking unit exception. ● Drive fault.	● Adjust the AC power voltage to a normal value. ● Set overvoltage parameters properly. ● Ask for manufacturer service. ● Replace the servo drive.
6	Undervoltage fault	● AC input power voltage too low (or voltage drop too great). ● AC 3PH input voltage with phase loss. ● Soft-startup relay not closed. ● Drive fault.	● Adjust the AC power voltage to a normal value. ● Check the power supply and run again. ● Ask for manufacturer service. ● Replace the servo drive.
7	Motor/drive overtemperature fault	● Rated load exceeded. ● Ambient temperature higher than 50℃. ● Incorrect motor temperature sensor wiring. ● Air duct blocked or fan damaged. ● Internal drive circuit fault.	● Check the load condition, run condition, or motor capacity again. ● Lower the ambient temperature to less than 50℃. ● Correct motor temperature sensor wiring. ● Replace the fan and clear the air duct. ● Replace the servo drive.
8	Pressure sensor fault	● Incorrect pressure sensor wiring. ● Pressure sensor exception. ● Incorrect pressure sensor model selection. ● Drive fault.	● Correct pressure sensor wiring. ● Replace the pressure sensor. ● Reselect a pressure sensor model. ● Replace the servo drive.

9 Maintenance and inspection

The internal components of drive will become ageing due to the influence of environmental temperature, humidity, dust, vibration and other factors, which causes the potential failure or shortens the service life. Therefore, routine inspection and periodic maintenance must be performed for the drive.

9.1 Precautions

Do not perform inspection when the power is on. Otherwise, electric shock may result.

Before inspection, cut off all the equipment power supplies; wait for more than 10 minutes or measure the voltage with a multimeter at the U+ and U- terminals is lower than 36V. This avoids the danger caused by the residual voltage of drive internal capacitor.

9.2 Check item

The following items need to be checked on a regular basis.

Check item	Details	Method	Expected result
Running environment	Ambient temperature, humidity, dust volume, dust composition, oil/ acid mist, and so on	Visual inspection, thermometer, and hygrometer	Requirements in the manual are met.
Power supply voltage	Whether the supply voltage is normal	Voltmeter and multimeter	Requirements in the manual are met.
	Whether power-on logic actions (such as contactor and air switch) are normal		
Drive exterior and internal components	Whether there is abnormal vibration, noise, deformation, or breakage	Screw fastening, visual inspection, multimeter	No exception occurs.
	Whether the external braking resistor connection is loose, resistor is aged, and resistance is normal		
Cable	Whether the power cable and its connection position are decolored, aged, or broken in the insulation layer.	Visual inspection	No ageing symptom such as decoloring or breakage
Air duct	Whether the air duct or heat sink is blocked	Visual inspection	No blocking

9.3 Main circuit insulation test

The megohmmeter test is limited to the insulation between the motor windings and the housing. Before the test, all wires between the motor and drive must be disconnected already. Only the 1000V megohmmeter can be used, with the insulation resistance greater than 50MΩ.

An improper insulation test method may damage the drive. You are not advised to perform the insulation test by yourself.

9.4 Replacement of wearing parts

9.4.1 Service life

The wearing parts of drive mainly include the cooling fan and electrolytic capacitor for filtering, whose service life is closely related to the running environment and maintenance condition. The following table lists the service life of the wearing parts, which can be replaced based on the accumulative run time.

Part	Service life	Test condition
Fan	≥ 5 years	Ambient temperature: 40°C Load rate: 80% Run time: 24 hours/day
Electrolytic capacitor	≥ 5 years	

9.4.2 Replacement

The fan or electrolytic capacitor that reaches the service life or has a damage needs to be replaced in time to avoid affecting the normal use of drive. The following table lists the replacement criteria and method.

Part	Symptom	Criteria	Replacement method
Fan	The shaft bearing is much worn out, the blades are aging, or the blades do not run.	The blades have cracks. There are abnormal noises or vibrations.	Loosen the screws, remove the fan cover, and pull it outward. After replacement, ensure that the wind blows outward.
Electrolytic capacitor	There is liquid outflow, the safety valve is loose, or the electrostatic capacitance value changes.	There is breakage in the exterior, the safety valve is loose, or the electrostatic capacitance value changes.	Do not replace the electrolytic capacitor by yourself since drive internal components are related. Please contact the supplier for the replacement.

10 Accessories

10.1 Noise filter model selection

Table 10-1 Mapping between drive models and noise filter models

Drive model	Magnet ring configuration	Input reactor configuration	Filter configuration
PH600.007.43ARSF	Small 63*38*25	20A	32A
PH600.011.43ARSF		30A	
PH600.015.43ARSF	Small 63*38*25	40A	45A
PH600.018.43ARSF		50A	
PH600.022.43ARSF	Medium 80*52*20	60A	65A
PH600.030.43ARSF		90A	
PH600.037.43ARSF	Medium 80*52*20	90A	100A
PH600.045.43ARSF	Medium 80*52*20	120A	
PH600.055.43ARSF	Medium 80*52*20	150A	150A
PH600.075.43BRSF	Extra large 102*65*20	200A	
PH600.090.43BRSF	Extra large 102*65*20	250A	240A
PH600.110.43BRSF	Extra large 102*65*20	250A	

10.2 Braking resistor model selection and installation

Table 10-2 Mapping between drive models and braking resistor/unit specifications/models

Drive model	Braking resistor specifications		Braking unit model
	Resistance (Ω)	Power (W)	
PH600.007.43ARSF	40	1000	Built-in braking unit
PH600.011.43ARSF	40	1000	
PH600.015.43ARSF	40	1000	
PH600.018.43ARSF	40	1000	
PH600.022.43ARSF	15	1500	
PH600.030.43ARSF	15	1500	
PH600.037.43ARSF	10	2000	
PH600.045.43ARSF	10	2000	
PH600.055.43ARSF	10	2000	
PH600.075.43BRSF	10	4000 (two of 10Ω/2000W, in parallel connection)	
PH600.090.43BRSF	5	4000 (two of 10Ω/2000W, in parallel connection)	
PH600.110.43BRSF	5	4000 (two of 10Ω/2000W, in parallel connection)	

The servo drives have built-in braking units but do not have internal braking resistors. Please be sure to connect an external braking resistor assembly for the drive. The braking resistor

with higher power may be needed when the motor brakes frequently. In this situation, you can order the braking resistor with small resistance but high power. The external braking resistor must be installed in a well-ventilated area, away from combustible objects or non heat-resistant parts.

When configuring the external braking resistor by yourself, you must ensure the resistance value is at least equal to the specified value. Otherwise, drive damage may result.

Braking resistor installation

All resistors must be installed in places with good cooling conditions.

	The materials near the braking resistor or braking unit must be flame resistant. since the surface temperature of the resistor is high and air flowing from the resistor is of hundreds of degrees Celsius. Prevent any materials from coming into contact with the resistor.

Braking resistor installation

	PB and (+) are the terminals for connecting braking resistors.

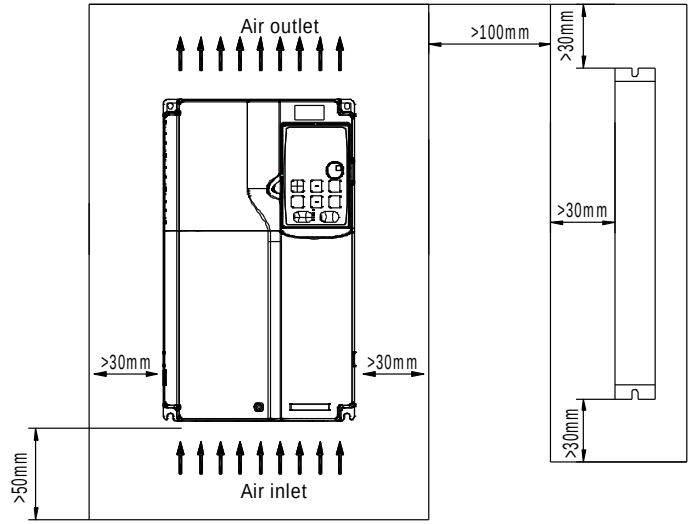

Figure 10-1 PH600.007.43ARSF ~ PH600.037.43ARSF drive and braking resistor layout

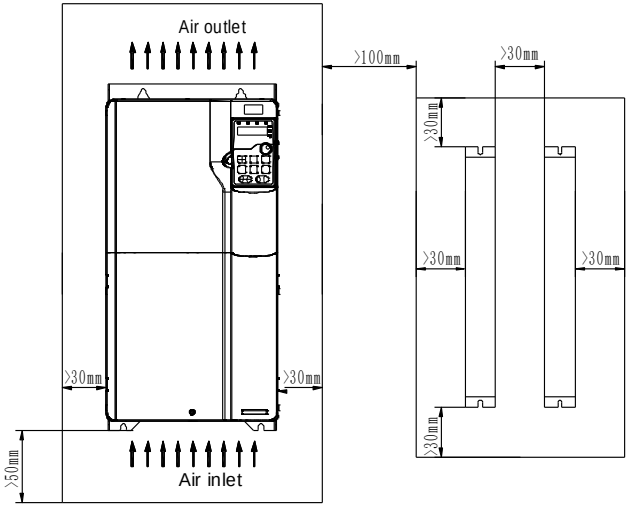

Figure 10-2 PH600.045.43ARSF ~ PH600.075.43BRSF drive and braking resistor layout

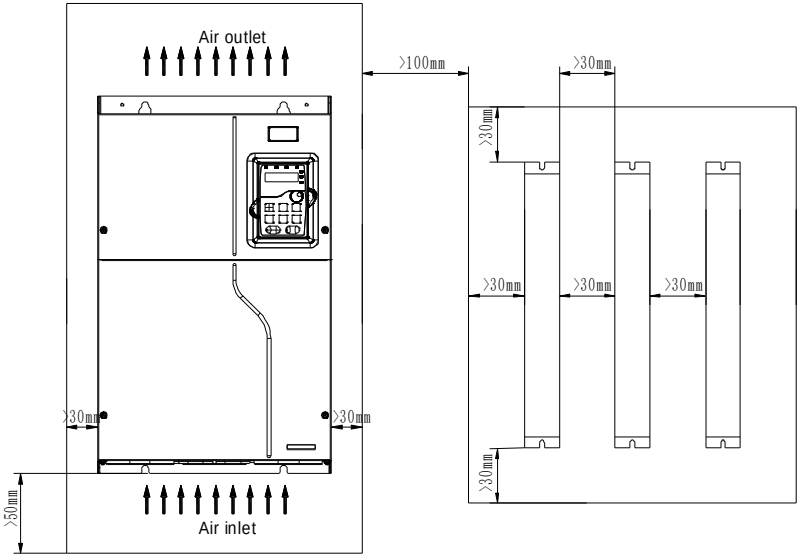

Figure 10-3 PH600.090.43BRSF ~ PH600.110.43BRSF drive and braking resistor layout

10.3 Pressure sensor model selection

Pressure sensor terminal

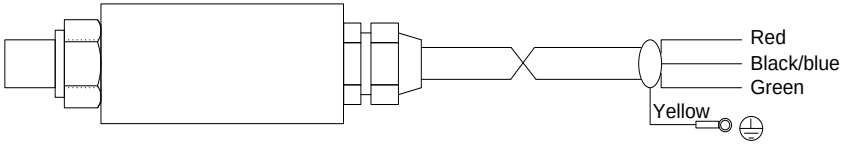

Figure 10-4 Pressure sensor diagram

COLOR	NAME	DEFINITION
Red	15V	15V power supply
Black/Blue	GND	Pressure analog signal output
Green	AI3	
Yellow	PE	Ground wire

The raw tape is used to seal the connection between the pressure sensor and the oil path. During installation, the pressure sensor must be fastened securely to avoid leakage.

PERPETUAL MOTION

Version：PHSMOM2506-V05