Ultract III Servo Motors

Ultract III系列交流永磁同步伺服电机

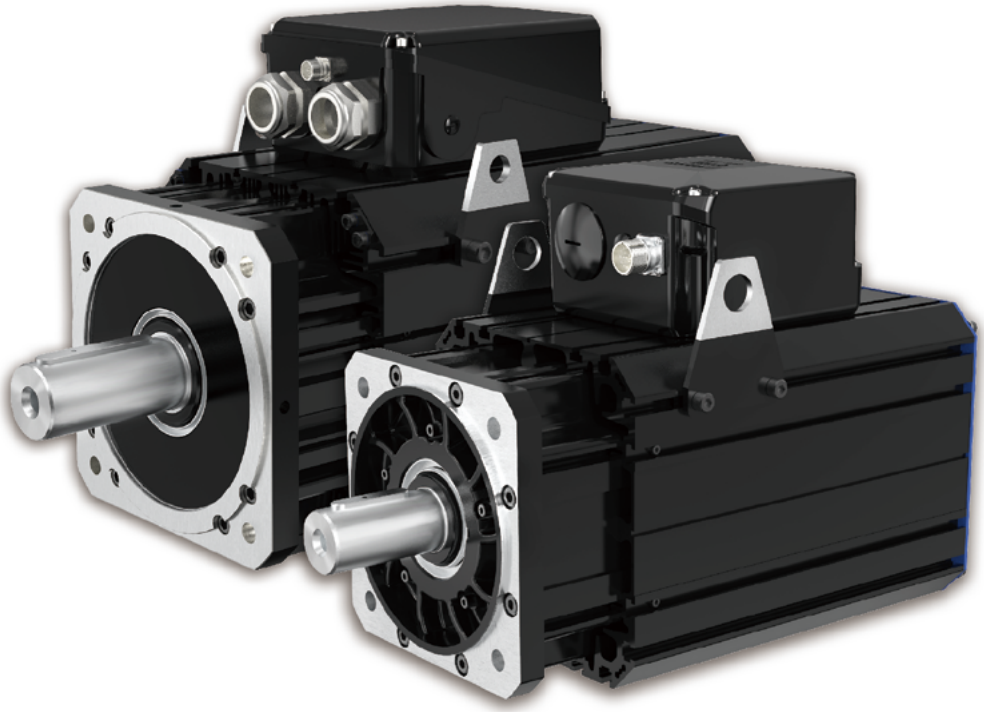

宁波菲仕技术股份有限公司

www.physis.com.cn

Company Profile
企业简介

宁波菲仕技术股份有限公司（简称：菲仕技术）成立于 2001 年，由民营控股、先进制造产业投资基金和宁波和丰创业投资有限公司等战略投资人参股，公司致力于以电驱动技术为核心的创新及产业化，为运动控制和能量转换领域提供系统产品和综合解决方案， 经过多年的品牌沉淀，菲仕已成为一家集研发、生产、销售为一体，拥有国内外多家控股子公司的集团化创新型高科技企业。

Ningbo Physis Technology Co., Ltd. was founded in 2001, which is a private enterprise holding group company, invested by Advanced Manufacturing Fund and Ningbo Hefeng Venture Capital Co., Ltd. Physis always devotes to innovation and industrialization of electrical drive technology, provides servo products and solutions for the field of motion control & energy conversion. After years of brand development and accumulation, Physis became a collectivized & innovative high-tech enterprise, which collects together research and development (R&D), production and sale, has a numbers of domestic and overseas subsidiaries.

R&D Team
研发团队

在智能制造全球化的趋势中，菲仕逐步落地国际化的战略布局，在欧洲成立了研发中心，与国内外专业科研机构、专家合作，进行定期交流和互动，以保持公司持续站立在伺服系统科技创新的最前沿，共同推进产业发展。经过多年的沉淀，顶尖人才的积累，菲仕在国内拥有省级工程技术中心、省级高新技术企业研究开发中心，并入选了国家工信部第一批专精特新“小巨人”企业！

2 个	3 个	200 +	300 +
研发中心	生产基地	研发团队	授权专利

In the globalization tendency of intelligent manufacture, Physis implements the strategic layout of the group internationalization gradually, builds the R&D center in Europe, communicate and interact regularly with the world-class scientific research institution & industry experts, which makes Physis hold on the lead of the servo system technology innovation and promote industrial development together! After years of development, accumulation of talents, Physis has provincial engineering & technology center and more than 200 people of R&D team. Until now, Physis has more than 300 patents.

CONTENTS 目录

标准配置 01
Specification of Standard Models

电机订购代码 02
Motor Coding

电机技术参数 03
Technical Data Summary

U303 _ _ A 系列电机 /Motors
U305 _ _ A 系列电机 /Motors
U307 _ _ A 系列电机 /Motors
U307 _ _ F 系列电机 /Motors
U307 _ _ C 系列电机 /Motors
U310 _ _ A 系列电机 /Motors
U310 _ _ F 系列电机 /Motors
U310 _ _ C 系列电机 /Motors
U313 _ _ A 系列电机 /Motors
U313 _ _ F 系列电机 /Motors
U313 _ _ C 系列电机 /Motors
U318 _ _ F 系列电机 /Motors
U318 _ _ C 系列电机 /Motors

电机性能曲线 29
Motor Performance Curves

过载率 / Overload Rating
热衰减 / Thermal Derating

电机接线 30
Motor Connection

安全制动说明 34
Safety Brake Specification

电机和机器保护 34
Motor And Machine Protetion

应用指南 35
Application Guidelines

规范说明 42
Conformity Declaration

联系我们 44
Contact Information

Specification of Standard Models
标准配置

类型 Type	无刷永磁交流伺服电机，低惯量，高刚性	Brushless PM AC servomotors, low inertia, high angular stiffness
转子 Rotor	均匀一致 , 高耐温稀土磁钢，机械固定 (无需胶粘)	Syntered, high temperature rare earth, mech anically fastened magnets(without bonding)
绝缘等级 Insulation	电机 : 根据 D1N0530 标准 F 级 ; 绕组 : 根据 D1N0530 标准 H 级 ; 特殊的高频绕组适合于长配线高频 PWM 波形	Motor: Class F according to D1N 0530 Winding: Class H according to D1N 0530, special high frequency winding suitable for long wiring with high frequency PWM waveforms
热保护 Thermal protection	PTC+KTY 线性探头	PTC+KTY 84 linear probe
轴承 Bearings	重载 , 自润滑	Heavy duty, life lubricated
平衡 Balancing	R 级 (减少允差)	Grade R(reduced tolerance)
安装法兰的同心度和垂直度 Concentricity and perpendicularity of mounting flange	根据 1EC 72-D1N0530 标准 R 级 (减少允差)	Grade R (reduced tolerance) according to 1EC 72- D1N 0530
轴 Shaft	无键光轴，或带键槽标准键	cylindrical shaft without keyway, or shaft with key
冷却选项 Cooling options	IC0041 自然对流 基座 7,10,13 和 18 系列电机可以选择风冷和水冷;	Natural convection IC0041 Size 7/10/13/18 option Fan cooling and water cooling
工作位置 Working position	任意	Any
安装 Mounting	法兰 B5 对于 U310、U313、U318 型号可选 B3 地脚安装	Flanged B5 option B3,Size U310&U313&U318 only
对地寄生电容 Stray capacitance to ground	最小化 EMC 干扰	Minimized EMC impact
防护等级 Protection	IP65 IP54(风冷电机)	1P 65 IP 54(motor with fan cooling)
位置传感器 Position sensor	S: 正余弦编码器 , 海德汉 M/N: 绝对值编码器，海德汉 Endat/ 西克 Hiperface D: 数字增量式编码器，多摩川 / 丹纳赫 R: 旋转变压器 , 多摩川	S:Sincos Encoder,heidenhain M/N:Absolute encoder,heidenhain Endat/ Sick Hiperface Incremental D:encoder,Tamagawa/Danaher R:Resolver,Tamagawa
安全制动器 Safety brake	根据不同电机可选择不同扭矩的安全制动器	According to the motor can choose different torque by safety brake
插头 Connector	工业级圆形航空接插件，信号或信号 + 电源	Industrial circular type, signal or signal + power

Motor Coding
电机订购代码

U3 10 07 F 20 3 R4 0 Y0 K b1

电机基座识别：
03, 05, 07, 10, 13, 18

Size, (ap prox. shaft he ight in cm)
03 (Motor □75) ,05(Motor □100)
07(Motor □145) ,10(Motor □200)
13(Motor □264) ,18(Motor □360)

堵转时输出转矩：
03, 05, 07 识别数字即为所指 Nm
10, 13, 16, 18, 20 识别数字 *10 为所指 Nm

Locked rotor motor torque:
Nm for size:03,05,07
Nm*10 for size:10,13,18,20

冷却方式
A: 自然冷却
F: 风扇强制冷却
C: 水冷却

cooling :
A: natural convection, no field
F: servo fan cooling
C: water cooling

额定转速：
rpm 100

Nominal speed identifier :
rpm*100

额定转速下额定电压：
2:220/240 Vac
3:380/440 Vac
4:480/516 Vac

Nominal voltage at nominal speed identifier:
2:220/240 Vac
3:380/440 Vac
4:480/516 Vac

编码器：
N7:Endat 多圈绝对值编码器 (4096 圈 +19 位 / 转)
S1: 正余弦 2048 周 / 转 + 单圈绝对通道 (用于 5-20 系列电机)
R4: 旋转变压器 多摩川 TS2640N321E64
Z: 无传感器
……

Sensor identifier:
N7: EnDat inductive absolute multi tur n(4096 rev +19 bit/rev
S1: Sincos 2048 cy/rev + single turn absolute track (for motor size 5...20)
R4: Resolver Tamagawa TS2640N321E64
Z: no sensor
……

安全制动器：
B: 带制动器
0: 不带制动器

Safety brake:
B:with brake
0:without brake

接线方式：
YZ: 电源和信号航空插座
Y0: 信号航空插座和电源盒
00: 无航空插座

connection:
YZ:Power and signal circular connector
Y0:Signal circular connector and power box
00:No circular connector

转轴：
K: 带键槽，标准键
E: 光轴

shaft:
K:shaft with key
E:cylindrical shaft without key

底板
b1: 菲仕标准底板
00: 无底板

Mounting feet:
b1:standard feet
00:without feet

订购代码示例：
U3 10 07 F 30 3 R4 B Y0 K b1
电机为 10 号基座，约 70Nm，额定 3000rpm，380Vac，风扇冷却 , 旋变编码器 TS2640N321E64, 带安全制动器 , 信号航空插座，伸出轴带键槽 , 标准底板。

ORDER CODE EXAMPLE :
U3 10 07 F 30 3 R4 B Y0 K b1
Motor type U31007F30(70Nm,3000rpm), 380Vac, servo fan cooling, resolverTS2640N321E64, safety brake, signal circular connector only, with Key on shaft, standard feet.

U303__A MOTOR

电机型号 /Motor Code			U30301A		U30302A			U30304A		
额定转速 /Rated Speed	nM	[rpm]	2000	3000	1000	2000	3000	1000	2000	3000
堵转转矩 /Stall Torque 2)	Md0	[Nm]	1.08		2.1			3.7		
堵转电流 /Current @ Stall Torque 2)	Id0	[A]	0.51	0.70	0.51	1.00	2.19	1.04	1.84	2.20
极数 /Number of Poles	2p		8							
额定值 /Nominal Rating										
额定转矩 /Rated Torque 2)	MdN	[Nm]	1	0.94	1.98	1.87	1.7	3.5	3.2	2.7
额定电流 /Rated Current 2)	IdN	[A]	0.47	0.61	0.48	0.89	1.77	0.99	1.59	1.61
额定功率 /Rated Power	PdN	[kW]	0.21	0.3	0.21	0.39	0.53	0.37	0.67	0.85
电压常数 /Voltage Constant 3)	Ke	[V/1000rpm]	145	105.8	281	143.9	65.9	243.5	138.4	115.4
扭矩常数 /Torque Constant 3)	Kt	[Nm/A]	2.40	1.75	4.65	2.38	1.09	4.03	2.29	1.91
温升 100°C时扭矩常数 Torque Constant @ 130°C 3)	Kt100	[Nm/A]	2.11	1.54	4.09	2.09	0.96	3.54	2.01	1.68
线电阻 /Winding Resistance 3)	Ru-v	[Ω]	119	60	150	43.16	8.5	53	15.84	10.1
线电感 /Winding Inductance 3)	Lu-v	[mH]	147	81	294	76.56	14.55	113.4	36.7	24
反电动势常数的温度系数 Derating Temp. Coeff. Of Back EMF	Dke/Dt	[%/°C]	-0.12							
额定电压 /Nominal Voltage	Vn	[V]	343	353	348	325	213	292	302	363
功率损耗 /Losses	Loss	[KW]	0.084	0.082	0.112	0.108	0.106	0.129	0.129	0.129
效率 /Efficiency	Eff	[%]	71	78	65	78	83	74	84	87
电压 380V 时的拐点速度 Knee Speed @ 380Vac	nknee1	[rpm]	2252	3249	1111	2377	5515	1358	2560	3149
电压 480V 时的拐点速度 Knee Speed @ 480Vac	nknee2	[rpm]	2932	4181	1462	3062	7017	1763	3275	4009
电压 380V 时的最大扭矩下的拐点速度 Knee Speed @ 380Vac and Mmax	nknee3	[rpm]	893	1654	309	1177	3552	516	1378	1840
电压 480V 时的最大扭矩下的拐点速度 Knee Speed @ 480Vac and Mmax	nknee4	[rpm]	1398	2327	564	1666	4669	800	1876	2456
最大值 /Maximum Values										
最大转矩 /Max. Torque	Mmax	[Nm]	5		10			20		
最大电流 /Max. Current (peak value)	Imax	[A]	2.6	3.6	2.7	5.3	11.5	6.2	10.9	13.1
380V 时最大速度 Max. Saturation Speed @ 380Vac	nmax1	[rpm]	2621	3592	1352	2641	5766	1561	2746	3293
480V 时最大速度 Max. Saturation Speed @ 480Vac	nmax2	[rpm]	3310	4537	1708	3336	7284	1971	3468	4159
最大机械速度 /Max. Mechanical Speed	nmax	[rpm]	6000							
机械参数 /Mechanical Data										
转子惯量 /Inertia	Jm	[Kgcm²]	0.48		0.92			1.72		
重量 /Mass	M	[Kg]	3		3.2			5		
制动器的机械参数 /Technical Data of the Holding Brake										
制动转矩 /Holding Torque	MBr	[Nm]	4							
额定电压 (±10%) Rated Voltage (±10%)	UBr	[Vdc]	24							
额定电流 /Rated Current	IBr	[A]	0.58							
重量 /Mass	MBr	[Kg]	0.5							
惯量 /Inertia	JBr	[Kgcm²]	0.22							
电机增加的长度 Addditional Motor Length	Length	[mm]	30							

测试条件 / Test Condition
1) 电机水平放置在自由静止空气中，环境温度 30°C / Motor tested in horizontal position in free still air, ambient temperature 30°C
2) 电机使用法兰连接在 300x300x20 的散热台上 / Motor flanged on heatsink 300x300x20
3) 典型公差值 ±10% / Typical data tolerance ±10%
4) PTC130 的报警温度 130°C / Treshold of built in PTC 130°C
5) 斩波频率 8kHz / Chopper frequency 8kHz

Type	L (mm)	H (mm)
U30301A	145	116.5
U30302A	167	117
U30304A	221	116.5

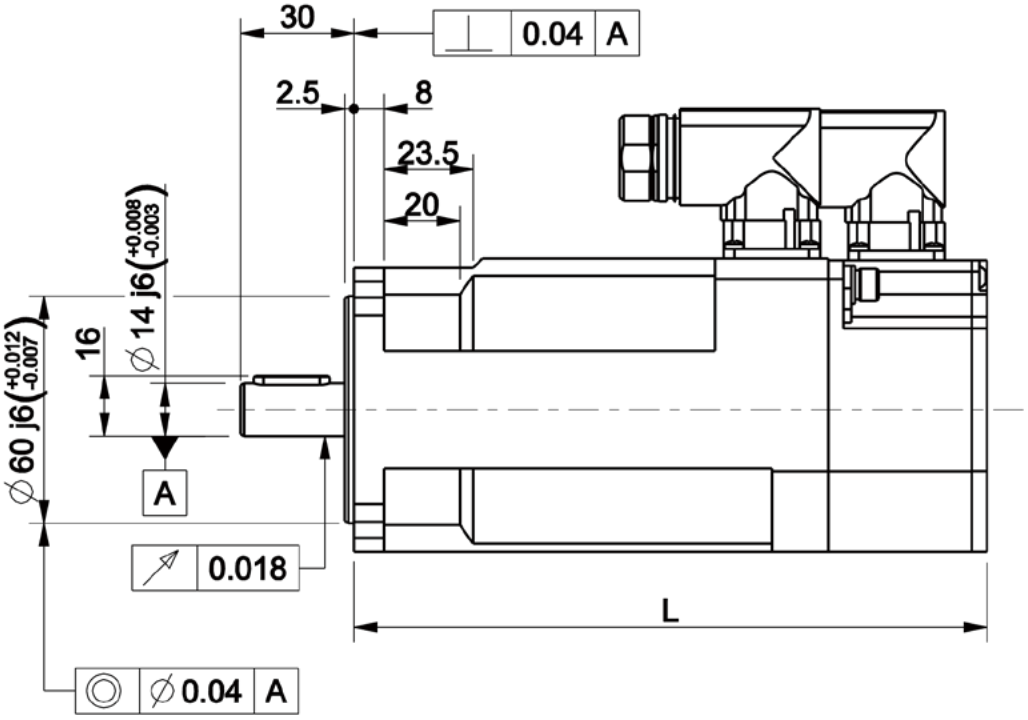

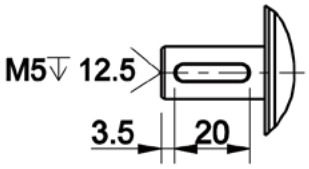

Option "K": key 5 x 5 x 20

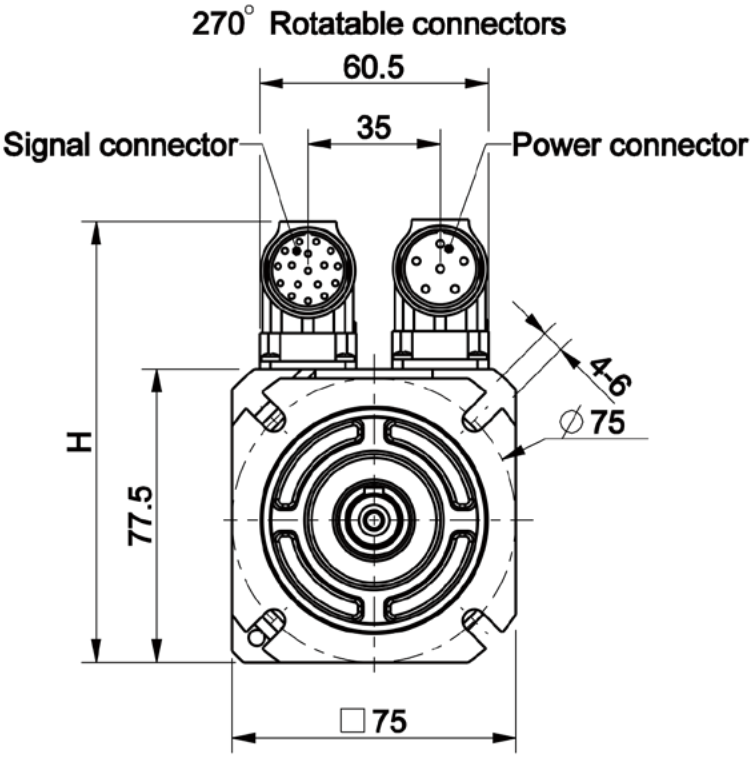

U305__A MOTOR

电机型号 /Motor Code			U30503A		U30506A		U30509A		U30512A	
额定转速 /Rated Speed	nM	[rpm]	1500	3000	1500	3000	1500	3000	1500	3000
堵转转矩 /Stall Torque 2)	Md0	[Nm]	3.6		7.2		10.5		14	
堵转电流 /Current @ Stall Torque 2)	Id0	[A]	1.4	2.7	2.7	5.4	4.1	7.7	5.2	10
极数 /Number of Poles	2p		8							
额定值 /Nominal Rating										
额定转矩 /Rated Torque 2)	MdN	[Nm]	3.5	3.1	7	6	10	8.6	13.2	11.4
额定电流 /Rated Current 2)	IdN	[A]	1.4	2.4	2.7	4.5	3.9	6.3	4.9	8.2
额定功率 /Rated Power	PdN	[kW]	0.55	0.97	1.10	1.88	1.57	2.70	2.07	3.58
电压常数 /Voltage Constant 3)	Ke	[V/1000rpm]	177	90	180	92	177	94	184	96
扭矩常数 /Torque Constant 3)	Kt	[Nm/A]	2.93	1.49	2.98	1.52	2.93	1.55	3.04	1.59
温升 100°C时扭矩常数 Torque Constant @ 130°C 3)	Kt100	[Nm/A]	2.58	1.31	2.62	1.34	2.58	1.37	2.68	1.40
线电阻 /Winding Resistance 3)	Ru-v	[Ω]	30.00	8.50	12.50	3.20	6.60	2.00	5.30	1.45
线电感 /Winding Inductance 3)	Lu-v	[mH]	112	26.00	54.70	14.2	34.00	9.80	27.8	7.59
反电动势常数的温度系数 Derating Temp. Coeff. Of Back EMF	Dke/Dt	[%/°C]	-0.12							
额定电压 /Nominal Voltage	Vn	[V]	312	295	309	297	297	300	308	306
功率损耗 /Losses	Loss	[KW]	0.12	0.13	0.19	0.18	0.23	0.23	0.29	0.29
效率 /Efficiency	Eff	[%]	82	88	85	91	87	92	88	93
电压 380V 时的拐点速度 Knee Speed @ 380Vac	nknee1	[rpm]	1867	3916	1877	3879	1956	3823	1879	3753
电压 480V 时的拐点速度 Knee Speed @ 480Vac	nknee2	[rpm]	2407	4994	2410	4934	2501	4858	2404	4767
电压 380V 时的最大扭矩下的拐点速度 Knee Speed @ 380Vac and Mmax	nknee3	[rpm]	958	2279	1025	2273	1115	2256	1036	2182
电压 480V 时的最大扭矩下的拐点速度 Knee Speed @ 480Vac and Mmax	nknee4	[rpm]	1291	2979	1365	2939	1468	2912	1366	2815
最大值 /Maximum Values										
最大转矩 /Max. Torque	Mmax	[Nm]	14		28		42		58	
最大电流 /Max. Current (peak value)	Imax	[A]	6.0	11.8	11.8	23.0	17.9	33.8	23.8	45.7
380V 时最大速度 Max. Saturation Speed @ 380Vac	nmax1	[rpm]	2147	4222	2111	4130	2147	4043	2065	3958
480V 时最大速度 Max. Saturation Speed @ 480Vac	nmax2	[rpm]	2712	5333	2667	5217	2712	5106	2609	5000
最大机械速度 /Max. Mechanical Speed	nmax	[rpm]	6000							
机械参数 /Mechanical Data										
转子惯量 /Inertia	Jm	[Kgcm²]	1.7		3.2		4.6		6	
重量 /Mass	M	[Kg]	5		7		9		11	
制动器的机械参数 /Technical Data of the Holding Brake										
制动转矩 /Holding Torque	MBr	[Nm]	9							
额定电压 (±10%) Rated Voltage (±10%)	UBr	[Vdc]	24							
额定电流 /Rated Current	IBr	[A]	0.75							
重量 /Mass	MBr	[Kg]	0.7							
惯量 /Inertia	JBr	[Kgcm²]	0.65							
电机增加的长度 Addditional Motor Length	Length	[mm]	33							

测试条件 / Test Condition
1) 电机水平放置在自由静止空气中，环境温度 30°C / Motor tested in horizontal position in free still air, ambient temperature 30°C
2) 电机使用法兰连接在 300x300x20 的散热台上 / Motor flanged on heatsink 300x300x20
3) 典型公差值 ±10% / Typical data tolerance ±10%
4) PTC130 的报警温度 130°C / Treshold of built in PTC 130°C
5) 斩波频率 8kHz / Chopper frequency 8kHz

Type	L (mm)	H (mm)
U30503A	195	139.5
U30506A	239	139.5
U30509A	283	139.5
U30512A	327	139.5

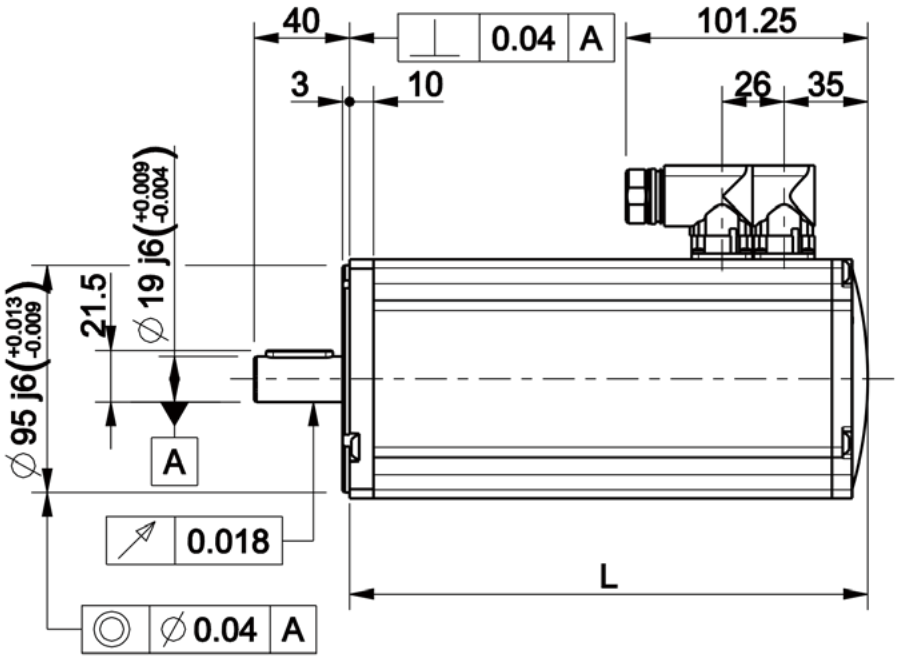

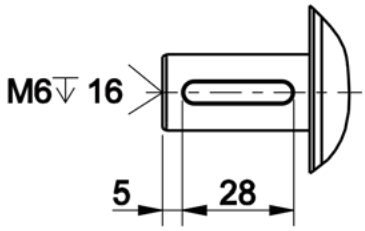

Option "K": full key 6 x 6 x 28

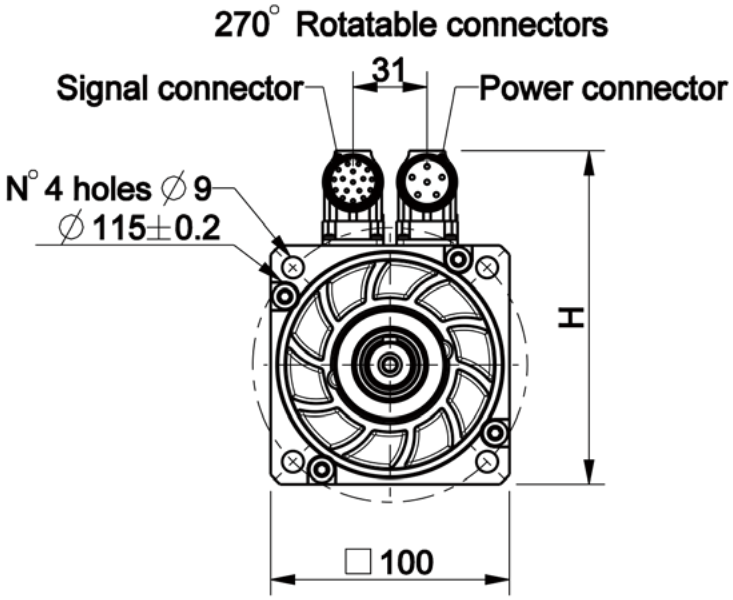

U307__A MOTOR

电机型号 /Motor Code			U30710A			U30720A			U30730A			U30740A		
额定转速 /Rated Speed	nM	[rpm]	1500	2000	3000	1500	2000	3000	1500	2000	3000	1500	2000	3000
堵转转矩 /Stall Torque 2)	Md0	[Nm]	10			19			27			35		
堵转电流 /Current @ Stall Torque 2)	Id0	[A]	3.4	4.2	6.1	6.0	7.8	11.7	8.3	11.1	19.9	10.7	12.1	24.0
极数 /Number of Poles	2p		8											
额定值 /Nominal Rating														
额定转矩 /Rated Torque 2)	MdN	[Nm]	9.1	9	8.5	17	16	11	24	23	18	33	32	26
额定电流 /Rated Current 2)	IdN	[A]	3.1	3.8	5.2	5.4	6.5	6.7	7.4	9.4	13.3	10.1	11.0	17.9
额定功率 /Rated Power	PdN	[kW]	1.4	1.9	2.7	2.7	3.3	3.5	3.8	4.8	5.7	5.2	6.7	8.2
电压常数 /Voltage Constant 3)	Ke	[V/1000rpm]	202	162	112	218	168	112	224	167.6	93	224	199	100
扭矩常数 /Torque Constant 3)	Kt	[Nm/A]	3.34	2.68	1.85	3.61	2.78	1.85	3.70	2.77	1.54	3.70	3.29	1.65
温升 100°C时扭矩常数 Torque Constant @ 130°C 3)	Kt100	[Nm/A]	2.94	2.36	1.63	3.17	2.45	1.63	3.26	2.44	1.35	3.26	2.90	1.46
线电阻 /Winding Resistance 3)	Ru-v	[Ω]	10.30	6.62	3.05	4.26	2.54	1.11	2.348	1.49	0.41	1.85	1.43	0.33
线电感 /Winding Inductance 3)	Lu-v	[mH]	61.30	39.20	18.80	32.50	19.30	8.40	22.20	12.50	3.65	16.40	12.90	3.20
反电动势常数的温度系数 Derating Temp. Coeff. Of Back EMF	Dke/Dt	[%/°C]	-0.12											
额定电压 /Nominal Voltage	Vn	[V]	346	363	366	359	362	348	362	358	289	364	424	311
功率损耗 /Losses	Loss	[KW]	0.23	0.23	0.23	0.30	0.30	0.30	0.35	0.35	0.35	0.41	0.41	0.41
效率 /Efficiency	Eff	[%]	86	89	92	90	92	92	92	93	94	93	94	95
电压 380V 时的拐点速度 Knee Speed @ 380Vac	nknee1	[rpm]	1658	2103	3122	1591	2102	3281	1578	2129	3966	1571	1784	3672
电压 480V 时的拐点速度 Knee Speed @ 480Vac	nknee2	[rpm]	2127	2688	3973	2031	2677	4159	2009	2707	5022	2002	2270	4651
电压 380V 时的最大扭矩下的拐点速度 Knee Speed @ 380Vac and Mmax	nknee3	[rpm]	923	1202	1829	952	1281	2024	955	1298	2539	972	1115	2383
电压 480V 时的最大扭矩下的拐点速度 Knee Speed @ 480Vac and Mmax	nknee4	[rpm]	1217	1570	2359	1243	1658	2597	1239	1676	3242	1263	1443	3042
最大值 /Maximum Values														
最大转矩 /Max. Torque	Mmax	[Nm]	33			65			100			130		
最大电流 /Max. Current (peak value)	Imax	[A]	12	15	22	23	29	44	34	45	81	44	49	98
380V 时最大速度 Max. Saturation Speed @ 380Vac	nmax1	[rpm]	1881	2346	3393	1743	2262	3393	1696	2267	4086	1696	1910	3800
480V 时最大速度 Max. Saturation Speed @ 480Vac	nmax2	[rpm]	2376	2963	4286	2202	2857	4286	2143	2864	5161	2143	2412	4800
最大机械速度 /Max. Mechanical Speed	nmax	[rpm]	6000											
机械参数 /Mechanical Data														
转子惯量 /Inertia	Jm	[Kgcm²]	8			14			20			26		
重量 /Mass	M	[Kg]	12			16			20			24		
制动器的机械参数 /Technical Data of the Holding Brake														
制动转矩 /Holding Torque	MBr	[Nm]	32											
额定电压 (±10%) Rated Voltage (±10%)	UBr	[Vdc]	24											
额定电流 /Rated Current	IBr	[A]	1.08											
重量 /Mass	MBr	[Kg]	2.4											
惯量 /Inertia	JBr	[Kgcm²]	6											
电机增加的长度 Addditional Motor Length	Length	[mm]	50											

测试条件 / Test Condition
1) 电机水平放置在自由静止空气中，环境温度 30°C / Motor tested in horizontal position in free still air, ambient temperature 30°C
2) 电机使用法兰连接在 500x500x20 的散热台上或者保持法兰温度 30°C / Motor flanged (Tflange = 30°C or heatsinker 500x500x20)
3) 典型公差值 ±10% / Typical data tolerance ±10%
4) PTC130 的报警温度 130°C / Treshold of built in PTC 130°C
5) 斩波频率 8kHz / Chopper frequency 8kHz

Type	L (mm)	H (mm)
U30710A	208	184.5
U30720A	257	184.5
U30730A	307	184.5
U30740A	358	184.5

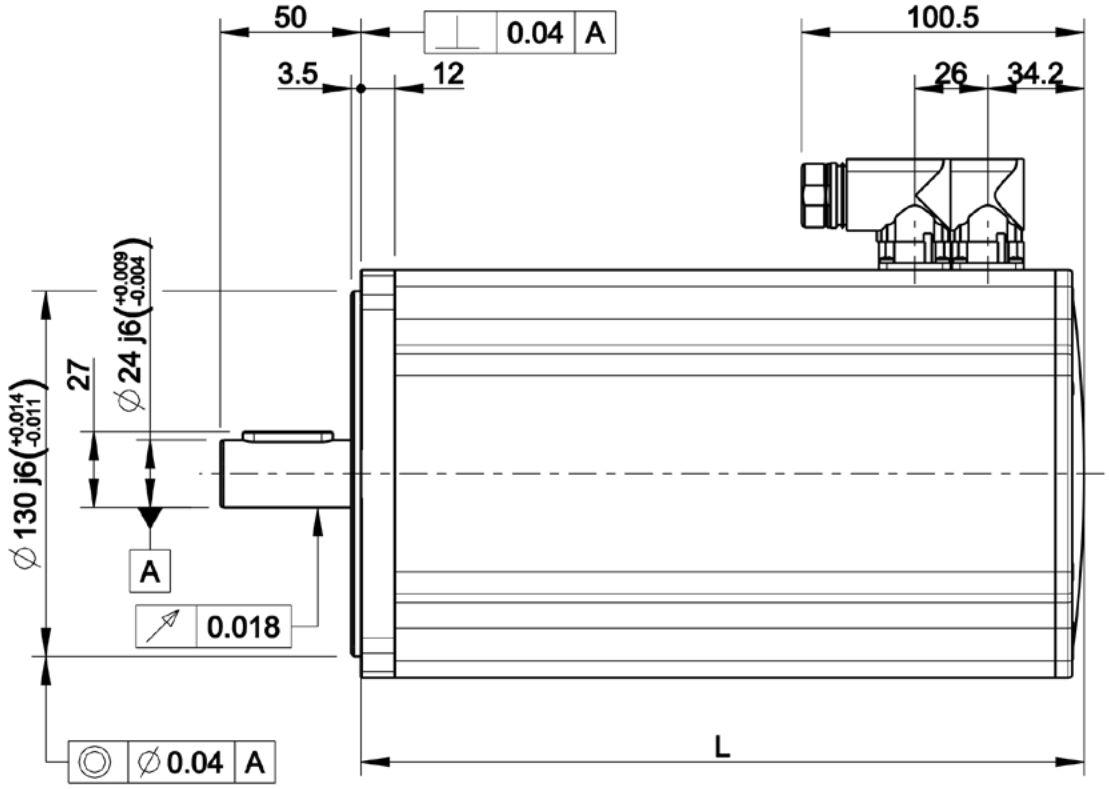

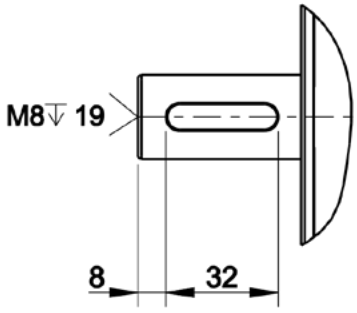

Option "K": full key 8 x 7 x 32

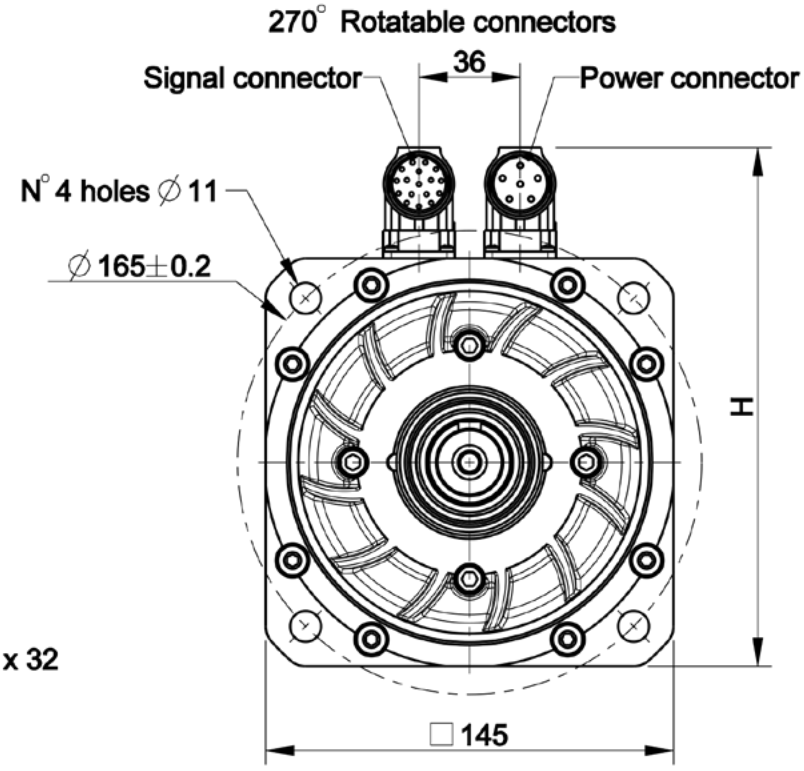

U307__F MOTOR

电机型号 /Motor Code			U30720F			U30730F			U30740F		
额定转速 /Rated Speed	nM	[rpm]	1500	2000	3000	1500	2000	3000	1500	2000	3000
堵转转矩 /Stall Torque 2)	Md0	[Nm]	24			41			54		
堵转电流 /Current @ Stall Torque 2)	Id0	[A]	9.8	9.8	14.3	12.4	16.6	23.7	16.4	24.1	32.7
极数 /Number of Poles	2p		8								
额定值 /Nominal Rating											
额定转矩 /Rated Torque 2)	MdN	[Nm]	21.7	21.7	21.7	39	36.4	35.9	45.5	44.5	43.5
额定电流 /Rated Current 2)	IdN	[A]	8.9	8.9	13.5	12.0	15.4	22.5	14.0	21.0	28.0
额定功率 /Rated Power	PdN	[kW]	3.4	4.5	6.8	6.1	7.6	11.3	7.1	9.3	13.7
电压常数 /Voltage Constant 3)	Ke	[V/1000rpm]	161.3	161.3	108	227.3	164.7	114.5	226	154.1	113.6
扭矩常数 /Torque Constant 3)	Kt	[Nm/A]	2.67	2.67	1.79	3.76	2.72	1.89	3.74	2.55	1.88
温升 100°C时扭矩常数 Torque Constant @ 130°C 3)	Kt100	[Nm/A]	2.35	2.35	1.57	3.31	2.40	1.67	3.29	2.24	1.65
线电阻 /Winding Resistance 3)	Ru-v	[Ω]	2	2	0.9741	2.092	1.337	0.607	1.934	0.7442	0.4114
线电感 /Winding Inductance 3)	Lu-v	[mH]	16.4	16.4	7.74	20.8	12.8	5.88	17	7.84	4.38
反电动势常数的温度系数 Derating Temp. Coeff. Of Back EMF	Dke/Dt	[%/°C]	-0.12								
额定电压 /Nominal Voltage	Vn	[V]	269	354	354	387	376	383	385	343	375
功率损耗 /Losses	Loss	[KW]	0.39	0.39	0.46	0.74	0.77	0.76	0.89	0.83	1.30
效率 /Efficiency	Eff	[%]	90	92	94	89	91	94	89	92	91
电压 380V 时的拐点速度 Knee Speed @ 380Vac	nknee1	[rpm]	2152	2152	3226	1471	2025	2973	1480	2223	3039
电压 480V 时的拐点速度 Knee Speed @ 480Vac	nknee2	[rpm]	2741	2741	4100	1879	2582	3778	1894	2828	3858
电压 380V 时的最大扭矩下的拐点速度 Knee Speed @ 380Vac and Mmax	nknee3	[rpm]	1422	1422	2124	1003	1290	1973	950	1485	2021
电压 480V 时的最大扭矩下的拐点速度 Knee Speed @ 480Vac and Mmax	nknee4	[rpm]	1834	1834	2722	1298	1662	2524	1235	1905	2582
最大值 /Maximum Values											
最大转矩 /Max. Torque	Mmax	[Nm]	65			100			130		
最大电流 /Max. Current (peak value)	Imax	[A]	30	30	45	33	46	66	43	64	86
380V 时最大速度 Max. Saturation Speed @ 380Vac	nmax1	[rpm]	2356	2356	3519	1672	2307	3319	1681	2466	3345
480V 时最大速度 Max. Saturation Speed @ 480Vac	nmax2	[rpm]	2976	2976	4444	2112	2914	4192	2124	3115	4225
最大机械速度 /Max. Mechanical Speed	nmax	[rpm]	6000								
机械参数 /Mechanical Data											
转子惯量 /Inertia	Jm	[Kgcm²]	14			20			26		
重量 /Mass	M	[Kg]	22			27			32		
制动器的机械参数 /Technical Data of the Holding Brake											
制动转矩 /Holding Torque	MBr	[Nm]	32								
额定电压 (±10%) Rated Voltage (±10%)	UBr	[Vdc]	24								
额定电流 /Rated Current	IBr	[A]	1.08								
重量 /Mass	MBr	[Kg]	2.4								
惯量 /Inertia	JBr	[Kgcm²]	6								
电机增加的长度 Addditional Motor Length	Length	[mm]	50								

测试条件 / Test Condition
1) 电机水平放置在自由静止空气中，环境温度 30°C / Motor tested in horizontal position in free still air, ambient temperature 30°C
2) 进水口温度最高 20°C / Water inlet temperature max 20°C
3) 典型公差值 ±10% / Typical data tolerance ±10%
4) PTC130 的报警温度 130°C / Treshold of built in PTC 130°C
5) 斩波频率 8kHz / Chopper frequency 8kHz

Type	L (mm)	H (mm)
U30720F	356.3	251.8
U30730F	406.3	251.8
U30740F	457.3	251.8

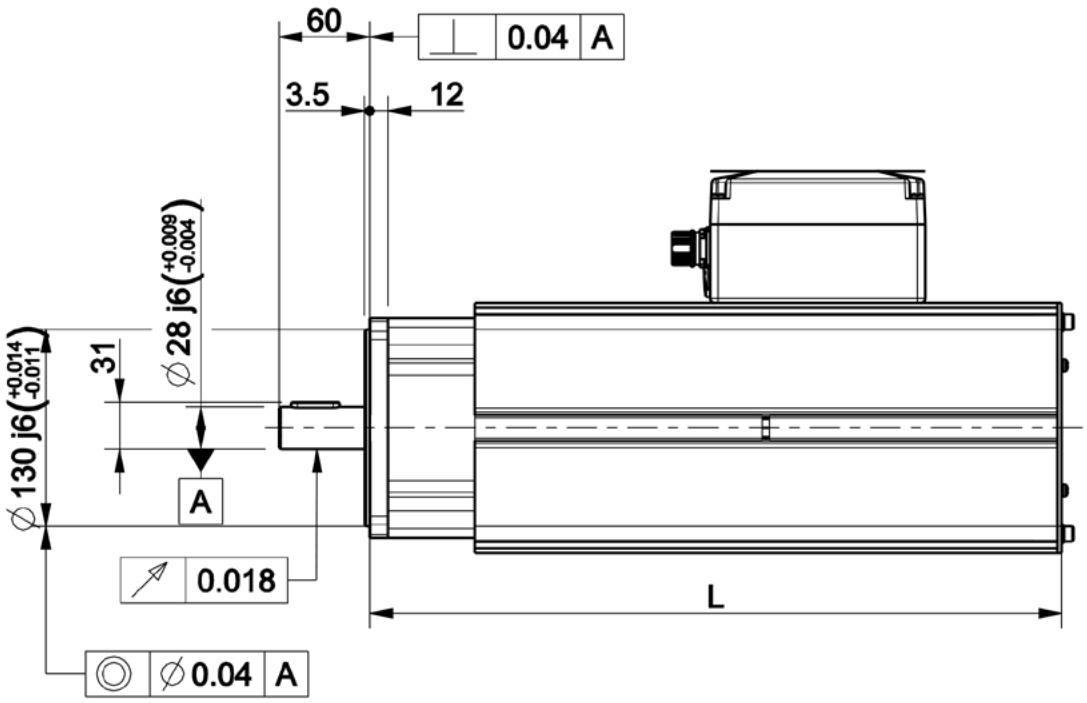

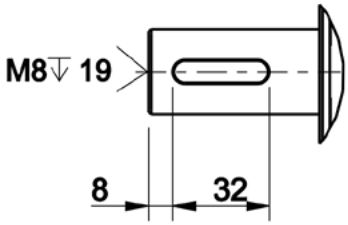

Option "K":full key 8 * 7 * 32

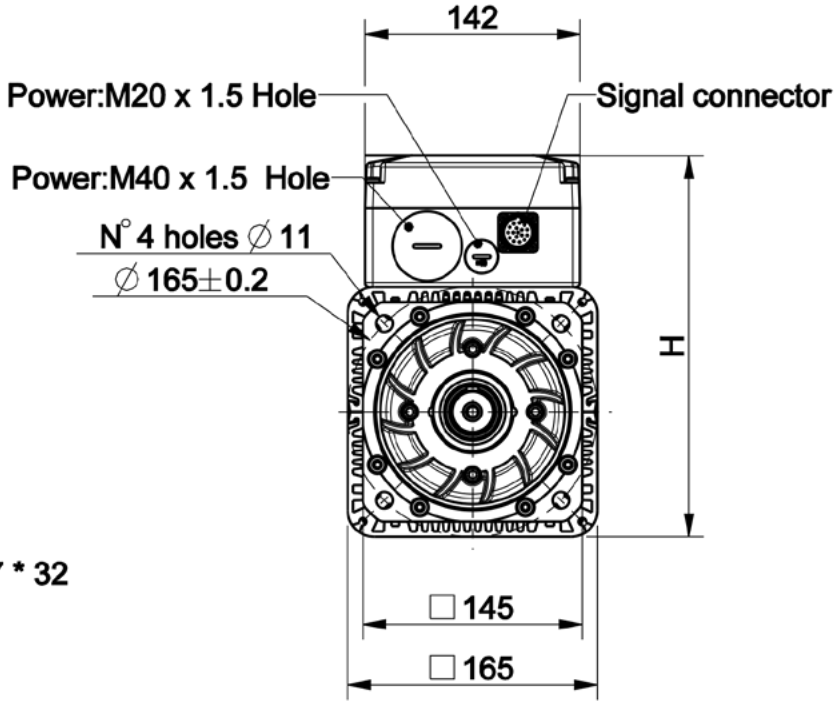

U307__C MOTOR

电机型号 /Motor Code			U30720C		U30730C		U30740C	
额定转速 /Rated Speed	nM	[rpm]	1500	3000	1500	3000	1500	3000
堵转转矩 /Stall Torque 2)	Md0	[Nm]	35		58		80	
堵转电流 /Current @ Stall Torque 2)	Id0	[A]	11	24	19	36	28	55
极数 /Number of Poles	2p		8					
额定值 /Nominal Rating								
额定转矩 /Rated Torque 2)	MdN	[Nm]	33	30	53	50	78	70
额定电流 /Rated Current 2)	IdN	[A]	10	21	18	31	27	48
额定功率 /Rated Power	PdN	[kW]	5	9	8	16	12	22
电压常数 /Voltage Constant 3)	Ke	[V/1000rpm]	218	100	205	112	199	100
扭矩常数 /Torque Constant 3)	Kt	[Nm/A]	3.61	1.65	3.39	1.85	3.29	1.65
温升 100°C时扭矩常数 Torque Constant @ 130°C 3)	Kt100	[Nm/A]	3.17	1.46	2.98	1.63	2.90	1.46
线电阻 /Winding Resistance 3)	Ru-v	[Ω]	4.18	0.82	2.2	0.67	1.25	0.38
线电感 /Winding Inductance 3)	Lu-v	[mH]	32.5	6.8	18.6	5.5	12.9	3.2
反电动势常数的温度系数 Derating Temp. Coeff. Of Back EMF	Dke/Dt	[%/°C]	-0.12					
额定电压 /Nominal Voltage	Vn	[V]	408	350	386	399	378	357
冷却水流量 /Minimum Flow Rate	Flow	[L/min]	2		3		5	
功率损耗 /Losses	Loss	[KW]	1.36		2.20		2.87	
效率 /Efficiency	Eff	[%]	79	87	79	88	81	88
电压 380V 时的拐点速度 Knee Speed @ 380Vac	nknee1	[rpm]	1388	3271	1477	2855	1509	3197
电压 480V 时的拐点速度 Knee Speed @ 480Vac	nknee2	[rpm]	1788	4162	1898	3639	1933	4070
电压 380V 时的最大扭矩下的拐点速度 Knee Speed @ 380Vac and Mmax	nknee3	[rpm]	953	2277	1040	2027	1132	2365
电压 480V 时的最大扭矩下的拐点速度 Knee Speed @ 480Vac and Mmax	nknee4	[rpm]	1246	2914	1351	2598	1460	3024
最大值 /Maximum Values								
最大转矩 /Max. Torque	Mmax	[Nm]	65		100		130	
最大电流 /Max. Current (peak value)	Imax	[A]	23	49	37	67	49	98
380V 时最大速度 Max. Saturation Speed @ 380Vac	nmax1	[rpm]	1743	3800	1854	3393	1910	3800
480V 时最大速度 Max. Saturation Speed @ 480Vac	nmax2	[rpm]	2202	4800	2341	4286	2412	4800
最大机械速度 /Max. Mechanical Speed	nmax	[rpm]	6000					
机械参数 /Mechanical Data								
转子惯量 /Inertia	Jm	[Kgcm²]	14		20		26	
重量 /Mass	M	[Kg]	17		21		25	
制动器的机械参数 /Technical Data of the Holding Brake								
制动转矩 /Holding Torque	MBr	[Nm]	32					
额定电压 (±10%) Rated Voltage (±10%)	UBr	[Vdc]	24					
额定电流 /Rated Current	IBr	[A]	1.08					
重量 /Mass	MBr	[Kg]	3					
惯量 /Inertia	JBr	[Kgcm²]	6					
电机增加的长度 Addditional Motor Length	Length	[mm]	50					

测试条件 / Test Condition

1) 电机水平放置在自由静止空气中，环境温度 30°C / Motor tested in horizontal position in free still air, ambient temperature 30°C
2) 进水口温度最高 20°C / Water inlet temperature max 20°C
3) 典型公差值 ±10% / Typical data tolerance ±10%
4) PTC130 的报警温度 130°C / Treshold of built in PTC 130°C
5) 斩波频率 8kHz / Chopper frequency 8kHz

Type	L (mm)
U30720C	257
U30730C	307
U30740C	358

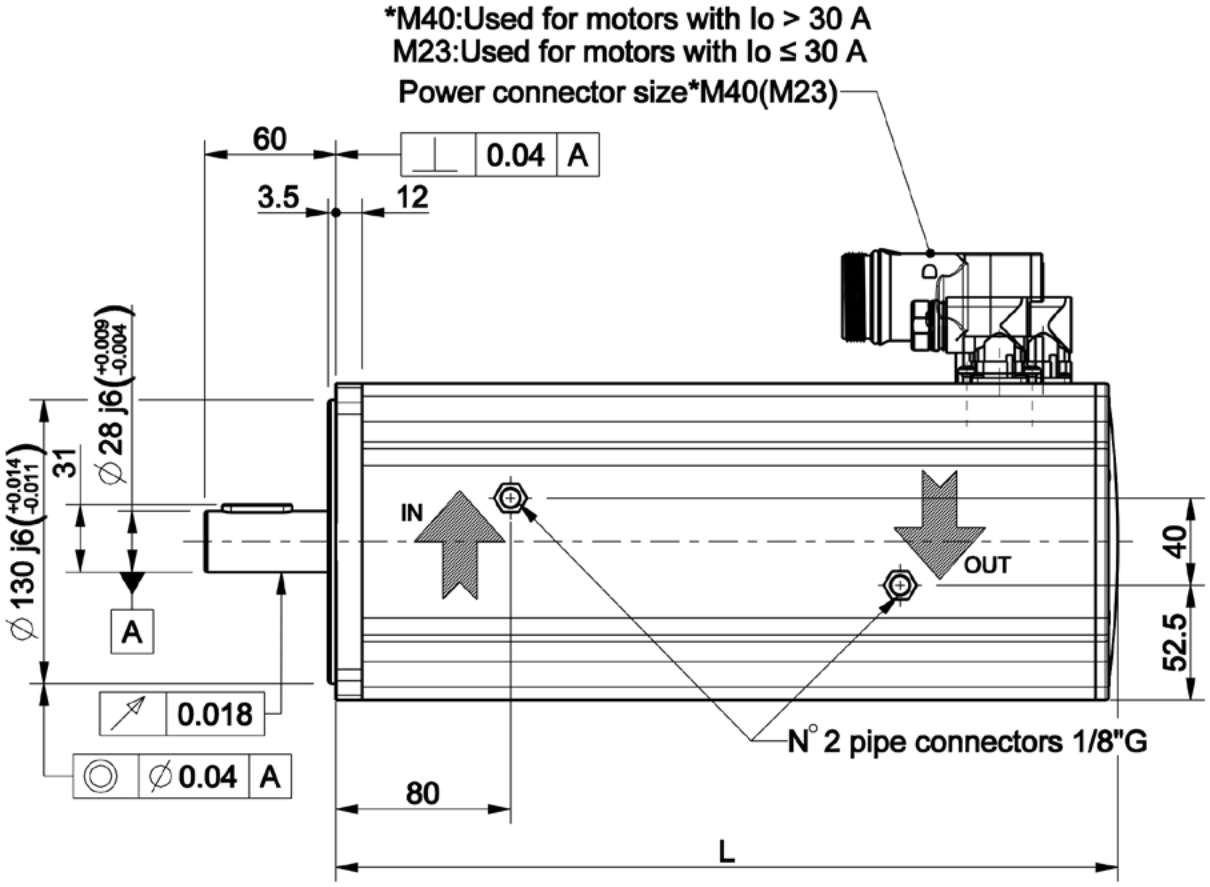

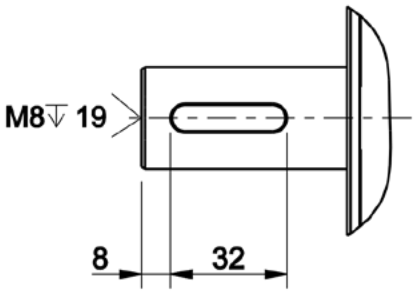

Option "K":full key 8 * 7 * 32

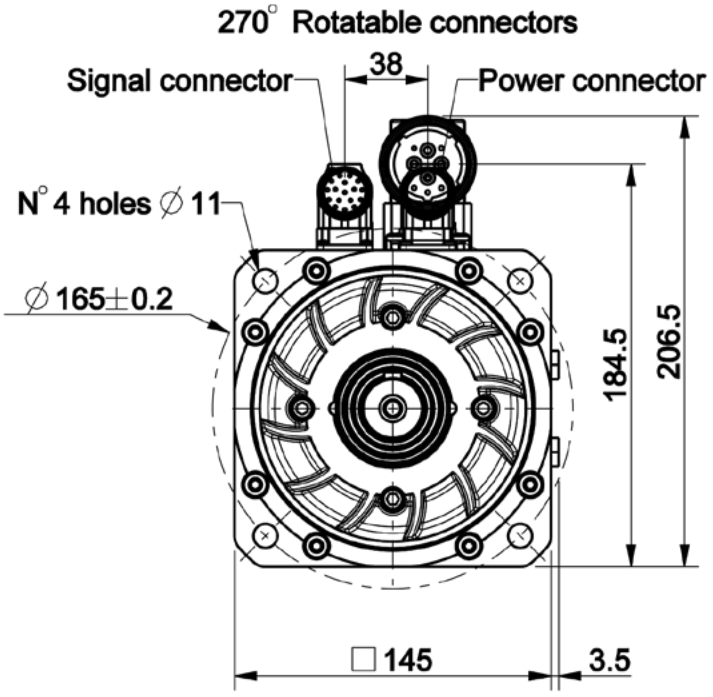

U310__A MOTOR

电机型号 /Motor Code			U31004A				U31007A				U31010A				U31013A			
额定转速 /Rated Speed	nM	[rpm]	1000	1500	2000	3000	1000	1500	2000	3000	1000	1500	2000	3000	1000	1500	2000	3000
堵转转矩 /Stall Torque 2)	Md0	[Nm]	35				60				88				105			
堵转电流 /Current @ Stall Torque 2)	Id0	[A]	9	11	14	24	15	19	28	45	20	31	36	55	25	33	49	64
极数 /Number of Poles	2p		8															
额定值 /Nominal Rating																		
额定转矩 /Rated Torque 2)	MdN	[Nm]	32	32	31	27	57	52	50	30	84	78	73	32	95	90	80	45
额定电流 /Rated Current 2)	IdN	[A]	8	10	13	18	14	16	23	22	19	28	30	20	22	28	38	28
额定功率 /Rated Power	PdN	[kW]	3.3	5	6	8	6	8	10	9	9	12	15	10	10	14	17	14
电压常数 /Voltage Constant 3)	Ke	[V/1000rpm]	277	213	166	102	274	221	148	93	304	193	166	110	293	221	146	112
扭矩常数 /Torque Constant 3)	Kt	[Nm/A]	4.58	3.52	2.75	1.68	4.54	3.65	2.44	1.53	5.02	3.19	2.74	1.82	4.85	3.65	2.42	1.85
温升 100°C时扭矩常数 Torque Constant @ 130°C 3)	Kt100	[Nm/A]	4.03	3.10	2.42	1.48	4.00	3.21	2.15	1.35	4.42	2.81	2.41	1.60	4.27	3.21	2.13	1.63
线电阻 /Winding Resistance 3)	Ru-v	[Ω]	3.400	2.000	1.220	0.458	1.290	0.820	0.370	0.145	0.908	0.370	0.270	0.120	0.620	0.350	0.154	0.090
线电感 /Winding Inductance 3)	Lu-v	[mH]	34.00	18.80	8.00	4.30	16.00	10.20	4.55	1.80	13.90	5.60	4.10	1.84	9.10	5.12	2.30	1.28
反电动势常数的温度系数 Derating Temp. Coeff. Of Back EMF	Dke/Dt	[%/°C]	-0.12															
额定电压 /Nominal Voltage	Vn	[V]	316	353	354	323	302	354	312	284	333	310	350	335	314	348	304	340
功率损耗 /Losses	Loss	[KW]	0.55	0.55	0.55	0.55	0.63	0.62	0.62	0.62	0.78	0.79	0.78	0.78	0.81	0.81	0.81	0.81
效率 /Efficiency	Eff	[%]	86	90	92	94	90	94	94	94	92	94	95	93	92	95	95	95
电压 380V 时的拐点速度 Knee Speed @ 380Vac	nknee1	[rpm]	1219	1619	2153	3536	1272	1613	2445	4029	1149	1848	2174	3410	1219	1640	2507	3356
电压 480V 时的拐点速度 Knee Speed @ 480Vac	nknee2	[rpm]	1559	2065	2740	4484	1621	2051	3101	5096	1463	2346	2756	4312	1549	2081	3175	4244
电压 380V 时的最大扭矩下的拐点速度 Knee Speed @ 380Vac and Mmax	nknee3	[rpm]	730	1021	1577	2270	782	1005	1551	2521	694	1137	1343	2039	754	1032	1578	2146
电压 480V 时的最大扭矩下的拐点速度 Knee Speed @ 480Vac and Mmax	nknee4	[rpm]	953	1323	2039	2901	1013	1294	1984	3209	897	1456	1716	2595	973	1325	2014	2733
最大值 /Maximum Values																		
最大转矩 /Max. Torque	Mmax	[Nm]	105				210				310				410			
最大电流 /Max. Current (peak value)	Imax	[A]	29	37	48	78	58	72	108	172	77	121	141	213	106	140	212	277
380V 时最大速度 Max. Saturation Speed @ 380Vac	nmax1	[rpm]	1372	1786	2286	3741	1384	1722	2578	4108	1252	1970	2294	3453	1296	1722	2597	3397
480V 时最大速度 Max. Saturation Speed @ 480Vac	nmax2	[rpm]	1733	2255	2887	4726	1749	2175	3254	5189	1582	2488	2897	4362	1637	2175	3281	4291
最大机械速度 /Max. Mechanical Speed	nmax	[rpm]	6000															
机械参数 /Mechanical Data																		
转子惯量 /Inertia	Jm	[Kgcm²]	50				90				130				170			
重量 /Mass	M	[Kg]	28				40				55				70			
制动器的机械参数 /Technical Data of the Holding Brake																		
制动转矩 /Holding Torque	MBr	[Nm]	140															
额定电压 (±10%) Rated Voltage (±10%)	UBr	[Vdc]	24															
额定电流 /Rated Current	IBr	[A]	2.3															
重量 /Mass	MBr	[Kg]	11															
惯量 /Inertia	JBr	[Kgcm²]	56															
电机增加的长度 Addditional Motor Length	Length	[mm]	65															

测试条件 / Test Condition
1) 电机水平放置在自由静止空气中，环境温度 30°C / Motor tested in horizontal position in free still air, ambient temperature 30°C
2) 电机使用法兰安装 (法兰温度 30°C) / Motor flanged (Tflange = 30°C)
3) 典型公差值 ±10% / Typical data tolerance ±10%
4) PTC130 的报警温度 130°C / Treshold of built in PTC 130°C
5) 斩波频率 8kHz / Chopper frequency 8kHz

Type	B (mm)		L (mm)
	Encoder: R,S,N1,etc...	Encoder: N3,S5,D6,M2,etc...	
U31004A	255	263.5	157
U31007A	327	335.5	232
U31010A	399	407.5	306
U31013A	471	479.5	381

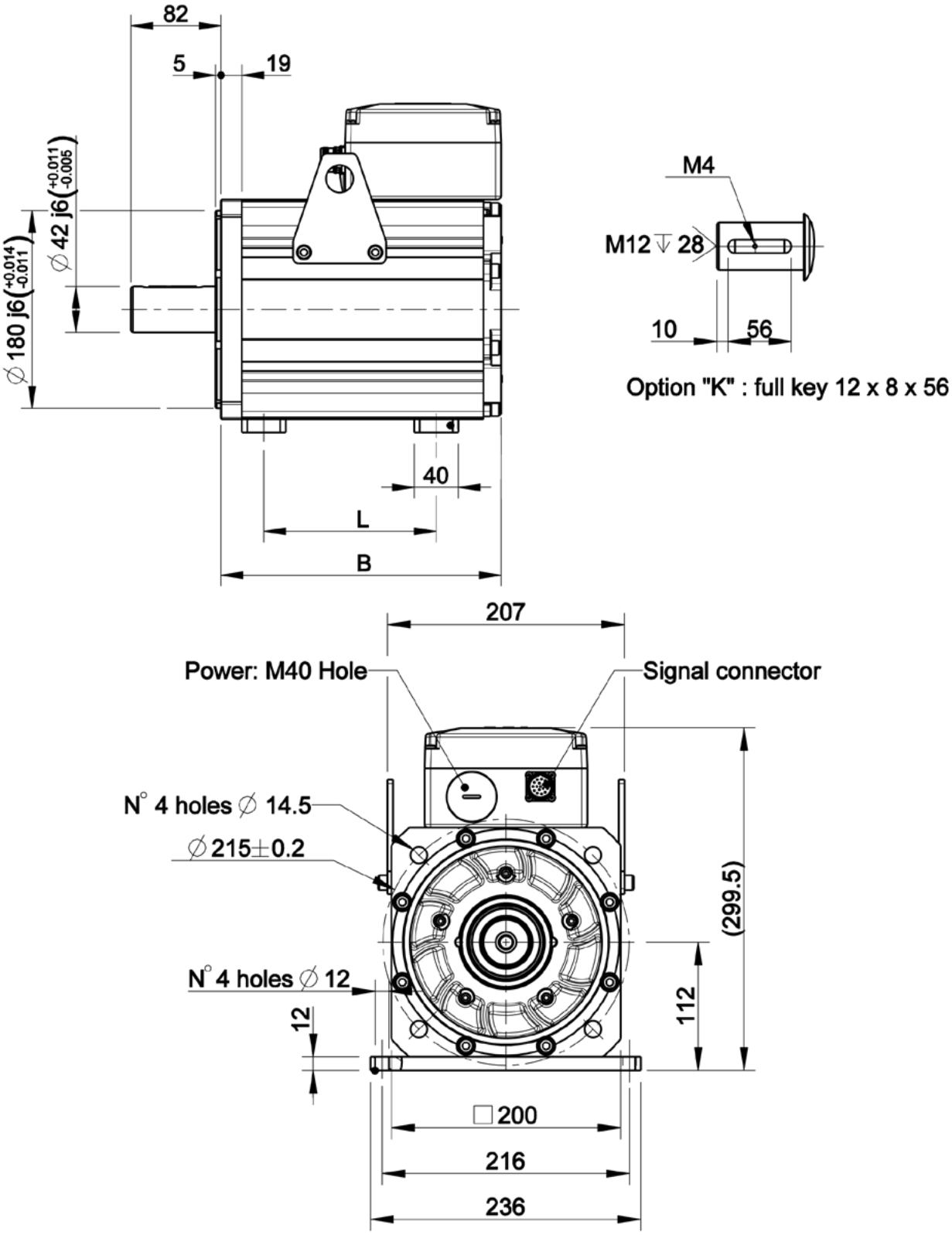

U310__F MOTOR

电机型号 /Motor Code			U31004F				U31007F				U31010F				U31013F			
额定转速 /Rated Speed	nM	[rpm]	1000	1500	2000	3000	1000	1500	2000	3000	1000	1500	2000	3000	1000	1500	2000	3000
堵转转矩 /Stall Torque 2)	Md0	[Nm]	45				90				130				170			
堵转电流 /Current @ Stall Torque 2)	Id0	[A]	11	16	22	30	23	30	42	67	30	46	65	81	40	53	80	104
极数 /Number of Poles	2p		8															
额定值 /Nominal Rating																		
额定转矩 /Rated Torque 2)	MdN	[Nm]	42	42	40	38	74	73	72	70	100	99	97	95	149	146	142	135
额定电流 /Rated Current 2)	IdN	[A]	10	15	20	26	19	24	34	52	23	35	48	59	35	45	67	83
额定功率 /Rated Power	PdN	[kW]	4	7	8	12	8	11	15	22	10	16	20	30	16	23	30	42
电压常数 /Voltage Constant 3)	Ke	[V/1000rpm]	277	193	139	102	274	206	148	93	302	193	138	110	293	221	146	112
扭矩常数 /Torque Constant 3)	Kt	[Nm/A]	4.58	3.20	2.30	1.68	4.54	3.40	2.44	1.53	5.00	3.19	2.28	1.82	4.85	3.65	2.42	1.85
温升 100°C时扭矩常数 Torque Constant @ 130°C 3)	Kt100	[Nm/A]	4.03	2.82	2.02	1.48	4.00	2.99	2.15	1.35	4.40	2.81	2.01	1.60	4.27	3.21	2.13	1.63
线电阻 /Winding Resistance 3)	Ru-v	[Ω]	3.400	1.650	0.860	0.458	1.290	0.720	0.370	0.145	0.910	0.370	0.190	0.120	0.620	0.350	0.154	0.090
线电感 /Winding Inductance 3)	Lu-v	[mH]	34.00	16.00	8.60	4.30	16.00	11.00	4.55	1.80	13.90	5.60	2.84	1.84	9.10	5.12	2.30	1.28
反电动势常数的温度系数 Derating Temp. Coeff. Of Back EMF	Dke/Dt	[%/°C]	-0.12															
额定电压 /Nominal Voltage	Vn	[V]	333	338	318	337	314	355	325	302	340	319	301	357	333	367	321	361
功率损耗 /Losses	Loss	[KW]	0.90	0.89	0.90	0.90	1.38	1.38	1.37	1.37	1.68	1.68	1.68	1.67	2.08	2.07	2.07	2.07
效率 /Efficiency	Eff	[%]	83	88	90	93	85	89	92	94	86	90	92	95	88	92	93	95
电压 380V 时的拐点速度 Knee Speed @ 380Vac	nknee1	[rpm]	1154	1701	2410	3393	1224	1610	2348	3794	1124	1795	2542	3200	1151	1554	2374	3161
电压 480V 时的拐点速度 Knee Speed @ 480Vac	nknee2	[rpm]	1481	2173	3067	4309	1563	2050	2983	4809	1433	2282	3224	4055	1468	1977	3013	4006
电压 380V 时的最大扭矩下的拐点速度 Knee Speed @ 380Vac and Mmax	nknee3	[rpm]	730	1118	1566	2270	782	954	1551	2521	693	1137	1628	2039	754	1032	1578	2146
电压 480V 时的最大扭矩下的拐点速度 Knee Speed @ 480Vac and Mmax	nknee4	[rpm]	953	1444	2009	2901	1013	1224	1984	3209	896	1456	2076	2595	973	1325	2014	2733
最大值 /Maximum Values																		
最大转矩 /Max. Torque	Mmax	[Nm]	105				210				310				410			
最大电流 /Max. Current (peak value)	Imax	[A]	29	41	57	78	58	77	108	172	78	121	170	213	106	140	212	277
380V 时最大速度 Max. Saturation Speed @ 380Vac	nmax1	[rpm]	1372	1964	2733	3741	1384	1849	2576	4108	1257	1970	2757	3453	1296	1722	2597	3397
480V 时最大速度 Max. Saturation Speed @ 480Vac	nmax2	[rpm]	1733	2481	3452	4726	1749	2335	3254	5189	1588	2489	3482	4362	1637	2175	3281	4291
最大机械速度 /Max. Mechanical Speed	nmax	[rpm]	6000															
机械参数 /Mechanical Data																		
转子惯量 /Inertia	Jm	[Kgcm²]	50				90				130				170			
重量 /Mass	M	[Kg]	35				50				65				80			
制动器的机械参数 /Technical Data of the Holding Brake																		
制动转矩 /Holding Torque	MBr	[Nm]	140															
额定电压 (±10%) Rated Voltage (±10%)	UBr	[Vdc]	24															
额定电流 /Rated Current	IBr	[A]	2.3															
重量 /Mass	MBr	[Kg]	11															
惯量 /Inertia	JBr	[Kgcm²]	56															
电机增加的长度 Addditional Motor Length	Length	[mm]	65															

测试条件 / Test Condition
1) 电机水平放置在自由静止空气中，环境温度 30°C / Motor tested in horizontal position in free still air, ambient temperature 30°C
2) 电机使用法兰安装 (法兰温度 30°C) / Motor flanged (Tflange = 30°C)
3) 典型公差值 ±10% / Typical data tolerance ±10%
4) PTC130 的报警温度 130°C / Treshold of built in PTC 130°C
5) 斩波频率 8kHz / Chopper frequency 8kHz

Type	L (mm)		M (mm)
	Encoder: R,S1,N7,etc...	Encoder: N3,D,S5,M2,etc...	
U31004F	342	350	267
U31007F	414	425	312
U31010F	486	497	396
U31013F	558	564	471

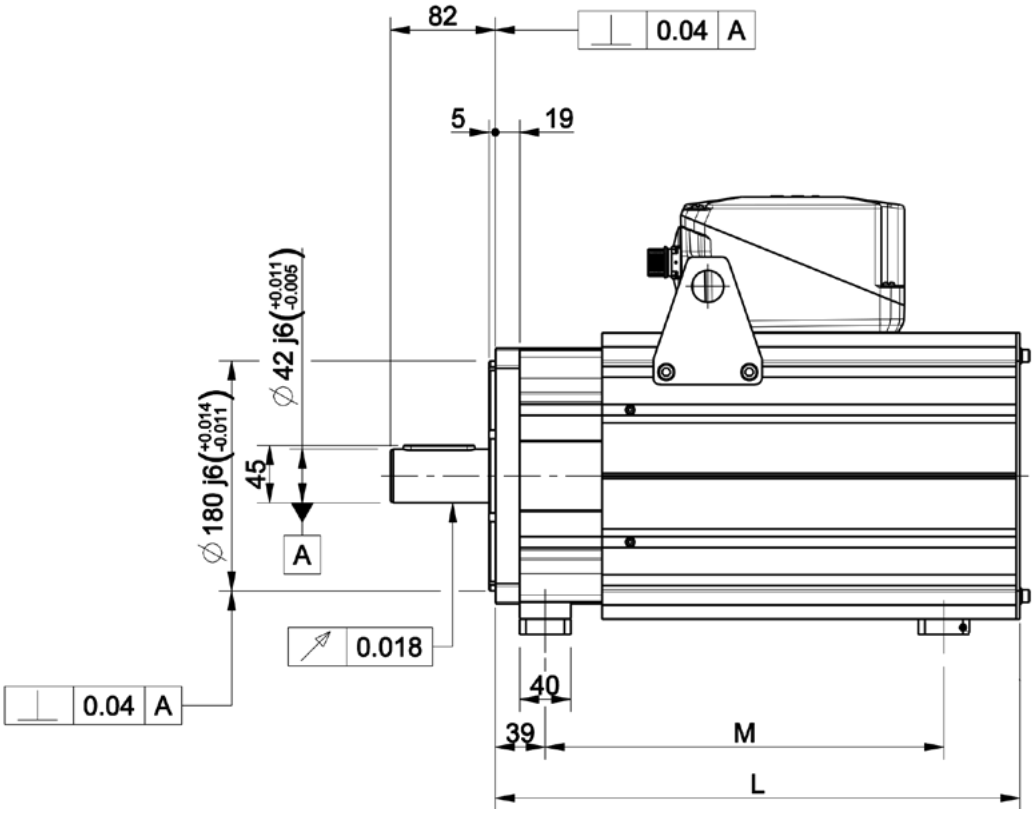

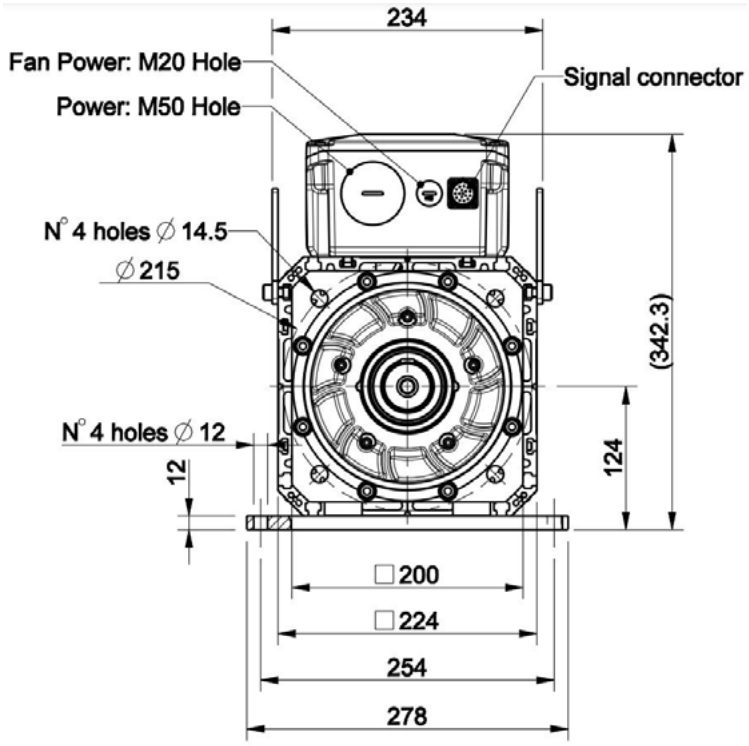

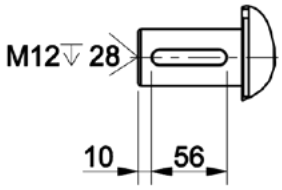

Option "K" : full key 12 x 8 x 56

U310__C MOTOR

电机型号 /Motor Code			U31004C				U31007C				U31010C				U31013C			
额定转速 /Rated Speed	nM	[rpm]	1000	1500	2000	3000	1000	1500	2000	3000	1000	1500	2000	3000	1000	1500	2000	3000
堵转转矩 /Stall Torque 2)	Md0	[Nm]	55				110				165				220			
堵转电流 /Current @ Stall Torque 2)	Id0	[A]	14	21	27	37	29	41	59	82	41	59	82	118	52	83	103	166
极数 /Number of Poles	2p		8															
额定值 /Nominal Rating																		
额定转矩 /Rated Torque 2)	MdN	[Nm]	54	53	53	53	109	108	108	108	164	164	163	160	219	219	218	217
额定电流 /Rated Current 2)	[Nm]	[A]	13	20	26	36	29	40	58	80	41	58	81	114	51	82	102	163
额定功率 /Rated Power	PdN	[kW]	6	8	11	17	11	17	23	34	17	26	34	50	23	34	46	68
电压常数 /Voltage Constant 3)	Ke	[V/1000rpm]	276	183	139	102	258	184	128	93	276	193	138	96	293	183	146	91
扭矩常数 /Torque Constant 3)	Kt	[Nm/A]	4.56	3.03	2.30	1.68	4.26	3.05	2.12	1.53	4.56	3.19	2.28	1.59	4.85	3.02	2.42	1.51
温升 100°C时扭矩常数 Torque Constant @ 130°C 3)	Kt100	[Nm/A]	4.01	2.67	2.02	1.48	3.75	2.68	1.87	1.35	4.01	2.81	2.01	1.40	4.27	2.66	2.13	1.33
线电阻 /Winding Resistance 3)	Ru-v	[Ω]	3.400	1.520	0.860	0.458	1.136	0.580	0.280	0.145	0.758	0.370	0.190	0.092	0.620	0.240	0.154	0.060
线电感 /Winding Inductance 3)	Lu-v	[mH]	34.00	14.50	8.60	4.30	15.00	7.65	3.75	1.80	11.50	5.60	2.87	1.40	9.10	3.80	2.30	0.90
反电动势常数的温度系数 Derating Temp. Coeff. Of Back EMF	Dke/Dt	[%/°C]	-0.12															
额定电压 /Nominal Voltage	Vn	[V]	356	339	340	360	327	341	313	328	347	356	335	345	363	337	351	325
冷却水流量 /Minimum Flow Rate	Flow	[L/min]	2.5				4				5				7			
功率损耗 /Losses	Loss	[KW]	1.25	1.27	1.25	1.24	1.92	1.91	1.91	1.90	2.52	2.51	2.52	2.51	3.23	3.23	3.23	3.23
效率 /Efficiency	Eff	[%]	86	87	90	93	86	90	92	95	87	91	93	95	88	91	93	95
电压 380V 时的拐点速度 Knee Speed @ 380Vac	nknee1	[rpm]	1075	1694	2252	3170	1177	1683	2447	3492	1102	1608	2279	3314	1052	1699	2173	3525
电压 480V 时的拐点速度 Knee Speed @ 480Vac	nknee2	[rpm]	1386	2168	2872	4032	1507	2146	3111	4433	1410	2049	2897	4204	1347	2165	2764	4471
电压 380V 时的最大扭矩下的拐点速度 Knee Speed @ 380Vac and Mmax	nknee3	[rpm]	730	1178	1566	2270	811	1172	1709	2521	770	1137	1618	2349	754	1207	1578	2569
电压 480V 时的最大扭矩下的拐点速度 Knee Speed @ 480Vac and Mmax	nknee4	[rpm]	952	1520	2009	2901	1048	1503	2182	3209	993	1456	2063	2987	973	1544	2014	3265
最大值 /Maximum Values																		
最大转矩 /Max. Torque	Mmax	[Nm]	105				210				310				410			
最大电流 /Max. Current (peak value)	Imax	[A]	29	43	57	78	62	86	124	172	85	121	170	244	106	170	212	339
380V 时最大速度 Max. Saturation Speed @ 380Vac	nmax1	[rpm]	1378	2074	2733	3741	1475	2061	2965	4108	1378	1970	2757	3953	1296	2081	2597	4162
480V 时最大速度 Max. Saturation Speed @ 480Vac	nmax2	[rpm]	1741	2620	3452	4726	1864	2603	3745	5189	1741	2489	3482	4993	1637	2629	3281	5258
最大机械速度 /Max. Mechanical Speed	nmax	[rpm]	6000															
机械参数 /Mechanical Data																		
转子惯量 /Inertia	Jm	[Kgcm²]	50				90				130				170			
重量 /Mass	M	[Kg]	35				43				57				70			
制动器的机械参数 /Technical Data of the Holding Brake																		
制动转矩 /Holding Torque	MBr	[Nm]	140															
额定电压 (±10%) Rated Voltage (±10%)	UBr	[Vdc]	24															
额定电流 /Rated Current	IBr	[A]	2.3															
重量 /Mass	MBr	[Kg]	11															
惯量 /Inertia	JBr	[Kgcm²]	56															
电机增加的长度 Addditional Motor Length	Length	[mm]	65															

测试条件 / Test Condition
1) 电机水平放置在自由静止空气中，环境温度 30°C / Motor tested in horizontal position in free still air, ambient temperature 30°C
2) 进水口温度最高 20°C / Water inlet temperature max 20°C
3) 典型公差值 ±10% / Typical data tolerance ±10%
4) PTC130 的报警温度 130°C / Treshold of built in PTC 130°C
5) 斩波频率 8kHz / Chopper frequency 8kHz
6) 如果 Id0>=130A，电机长度增加 20mm / If Id0 >= 130A: + 20mm of addtional length

Type	L (mm)		A (mm)	B (mm)
	Encoder: R,S1,N1,etc...	Encoder: N3,M2,S5,etc...		
U31004C	275	283.5	39	157
U31007C	347	355.5	100	232
U31010C	419	427.5	150	306
U31013C	491	499.5	218	381

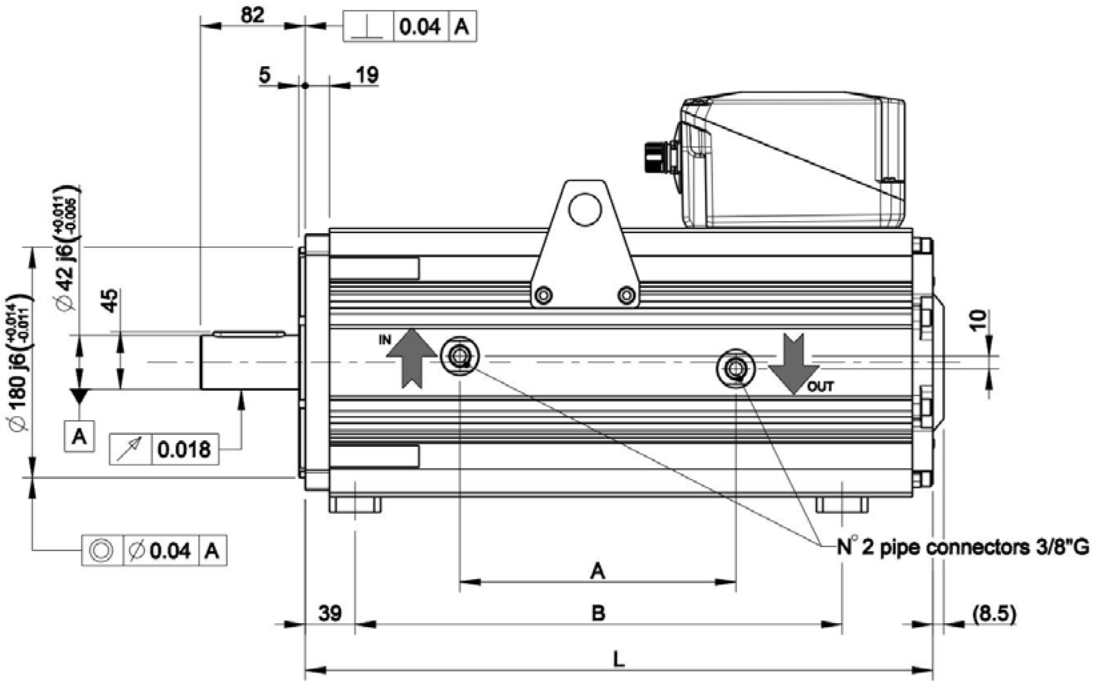

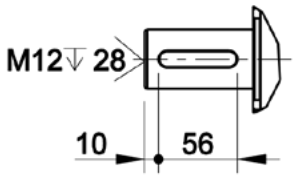

Option"K":full key 12 x 8 x 56

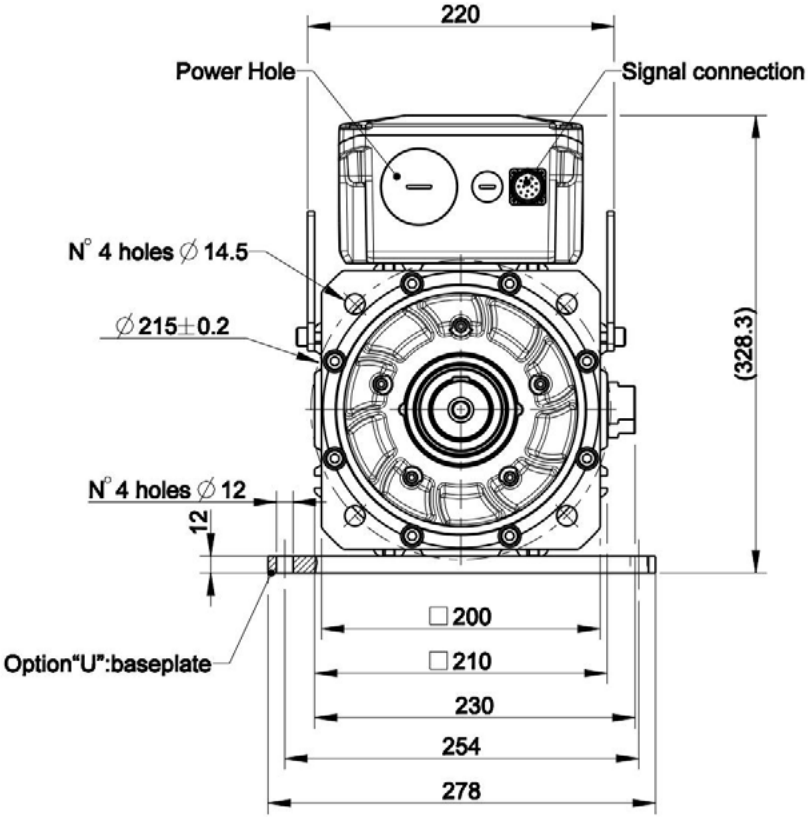

U313__A MOTOR

电机型号 /Motor Code			U31310A				U31320A				U31330A			U31340A		
额定转速 /Rated Speed	nM	[rpm]	1000	1500	2000	3000	1000	1500	2000	3000	1000	1500	2000	1000	1500	2000
堵转转矩 /Stall Torque 2)	Md0	[Nm]	100				190				260			350		
堵转电流 /Current @ Stall Torque 2)	Id0	[A]	20	30	40	60	39	58	88	117	54	81	107	65	108	163
极数 /Number of Poles	2p		8													
额定值 /Nominal Rating																
额定转矩 /Rated Torque 2)	MdN	[Nm]	95	93	87	70	170	160	100	50	240	230	180	270	230	130
额定电流 /Rated Current 2)	IdN	[A]	19	28	35	42	35	49	47	31	50	71	74	50	71	61
额定功率 /Rated Power	PdN	[kW]	10	15	18	22	18	25	21	16	25	36	38	28	36	27
电压常数 /Voltage Constant 3)	Ke	[V/1000rpm]	343	229	172	114	333	224	148	111	333	222	166	369	222	148
扭矩常数 /Torque Constant 3)	Kt	[Nm/A]	5.68	3.79	2.84	1.89	5.50	3.70	2.44	1.84	5.50	3.67	2.75	6.10	3.67	2.44
温升 100°C时扭矩常数 Torque Constant @ 130°C 3)	Kt100	[Nm/A]	5.00	3.34	2.50	1.66	4.84	3.26	2.15	1.62	4.84	3.23	2.42	5.37	3.23	2.15
线电阻 /Winding Resistance 3)	Ru-v	[Ω]	0.800	0.360	0.200	0.090	0.300	0.136	0.058	0.033	0.196	0.087	0.049	0.160	0.059	0.026
线电感 /Winding Inductance 3)	Lu-v	[mH]	18.00	8.26	4.50	2.00	9.10	4.00	1.94	1.03	6.00	2.70	1.50	5.50	2.20	0.97
反电动势常数的温度系数 Derating Temp. Coeff. Of Back EMF	Dke/Dt	[%/°C]	-0.12													
额定电压 /Nominal Voltage	Vn	[V]	378	374	367	358	361	358	305	336	358	354	345	389	347	299
功率损耗 /Losses	Loss	[KW]	0.69	0.70	0.69	0.70	1.00	1.00	0.98	0.98	1.22	1.22	1.22	1.47	1.50	1.49
效率 /Efficiency	Eff	[%]	93	96	96	97	95	96	96	97	96	97	97	96	97	97
电压 380V 时的拐点速度 Knee Speed @ 380Vac	nknee1	[rpm]	1007	1525	2069	3186	1055	1595	2499	3390	1064	1612	2203	977	1644	2540
电压 480V 时的拐点速度 Knee Speed @ 480Vac	nknee2	[rpm]	1281	1935	2622	4031	1339	2021	3161	4284	1350	2042	2787	1238	2080	3211
电压 380V 时的最大扭矩下的拐点速度 Knee Speed @ 380Vac and Mmax	nknee3	[rpm]	666	1007	1384	2101	679	1045	1503	2091	681	1033	1400	619	990	1507
电压 480V 时的最大扭矩下的拐点速度 Knee Speed @ 480Vac and Mmax	nknee4	[rpm]	855	1285	1762	2668	867	1330	1908	2652	870	1315	1779	791	1258	1912
最大值 /Maximum Values																
最大转矩 /Max. Torque	Mmax	[Nm]	280				550				830			1100		
最大电流 /Max. Current (peak value)	Imax	[A]	62	92	123	185	125	186	282	374	189	283	377	225	375	564
380V 时最大速度 Max. Saturation Speed @ 380Vac	nmax1	[rpm]	1107	1658	2213	3325	1143	1699	2576	3416	1143	1713	2286	1030	1713	2576
480V 时最大速度 Max. Saturation Speed @ 480Vac	nmax2	[rpm]	1398	2095	2795	4201	1443	2146	3254	4315	1443	2163	2887	1301	2163	3254
最大机械速度 /Max. Mechanical Speed	nmax	[rpm]	6000													
机械参数 /Mechanical Data																
转子惯量 /Inertia	Jm	[Kgcm²]	225				410				593			777		
重量 /Mass	M	[Kg]	85				115				150			185		
制动器的机械参数 /Technical Data of the Holding Brake																
制动转矩 /Holding Torque	MBr	[Nm]	300													
额定电压 (±10%) Rated Voltage (±10%)	UBr	[Vdc]	24													
额定电流 /Rated Current	IBr	[A]	1.74													
重量 /Mass	MBr	[Kg]	18													
惯量 /Inertia	JBr	[Kgcm²]	200													
电机增加的长度 Addditional Motor Length	Length	[mm]	80													

测试条件 / Test Condition
1) 电机水平放置在自由静止空气中，环境温度 30°C / Motor tested in horizontal position in free still air, ambient temperature 30°C
2) 电机使用法兰安装 (法兰温度 30°C) / Motor flanged (Tflange = 30°C)
3) 典型公差值 ±10% / Typical data tolerance ±10%
4) PTC130 的报警温度 130°C / Treshold of built in PTC 130°C
5) 斩波频率 8kHz / Chopper frequency 8kHz

Type	A1 (mm) In ⩽ 150A	A2 (mm)	L1 (mm)	L2 (mm)	L3 (mm)	B1 (mm)	D1	H1 (mm)
U31310A	332	200	112	90	10	14	48j6	51.5
U31320A	439	307	112	90	10	14	48j6	51.5
U31330A	546	414	112	90	10	14	48j6	51.5
U31340A	653	521	112	90	10	14	48j6	51.5

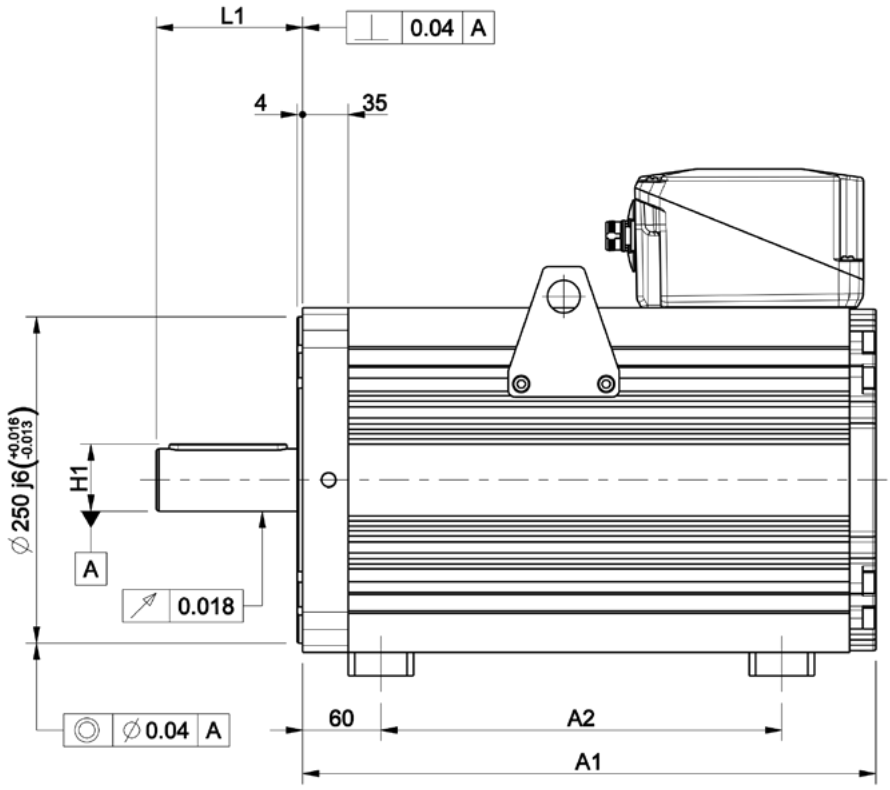

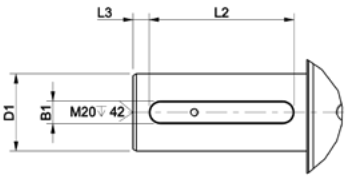

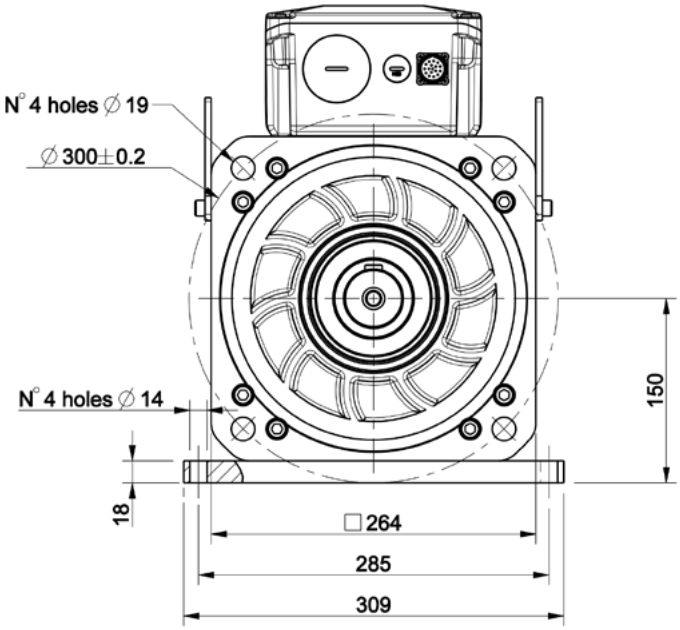

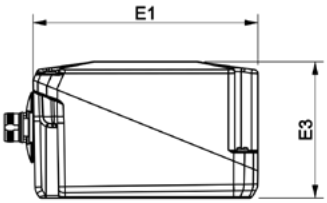

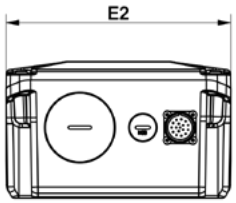

Box option (压铸铝)			
E1	E2	E3	Current
175	175	106.3	30A≤In<125A
240	195	122	125A≤In<200A
353	264	157.5	200A≤In<340A
353	264	157.5	340A≤In<600A

U313__F MOTOR

电机型号 /Motor Code			U31310F				U31320F				U31330F				U31340F			
额定转速 /Rated Speed	nM	[rpm]	1000	1500	2000	3000	1000	1500	2000	3000	1000	1500	2000	3000	1000	1500	2000	3000
堵转转矩 /Stall Torque 2)	Md0	[Nm]	150				280				410				540			
堵转电流 /Current @ Stall Torque 2)	Id0	[A]	30	49	60	90	58	86	130	173	85	127	469	253	125	167	251	333
极数 /Number of Poles	2p		8															
额定值 /Nominal Rating																		
额定转矩 /Rated Torque 2)	MdN	[Nm]	145	140	135	130	270	265	260	240	400	390	380	350	510	500	480	460
额定电流 /Rated Current 2)	IdN	[A]	29	46	54	78	56	81	121	148	83	121	157	216	118	155	224	284
额定功率 /Rated Power	PdN	[kW]	15	22	28	41	28	42	54	75	42	61	80	110	53	79	100	144
电压常数 /Voltage Constant 3)	Ke	[V/1000rpm]	343	210	172	114	333	224	148	111	333	222	166	111	296	222	148	111
扭矩常数 /Torque Constant 3)	Kt	[Nm/A]	5.68	3.47	2.84	1.89	5.50	3.70	2.44	1.84	5.50	3.67	2.75	1.84	4.90	3.67	2.44	1.84
温升 100°C时扭矩常数 Torque Constant @ 130°C 3)	Kt100	[Nm/A]	5.00	3.05	2.50	1.66	4.84	3.26	2.15	1.62	4.84	3.23	2.42	1.62	4.31	3.23	2.15	1.62
线电阻 /Winding Resistance 3)	Ru-v	[Ω]	0.800	0.300	0.200	0.090	0.300	0.136	0.058	0.033	0.196	0.087	0.049	0.022	0.105	0.059	0.026	0.015
线电感 /Winding Inductance 3)	Lu-v	[mH]	18.00	6.70	4.90	2.00	9.10	4.00	1.94	1.09	6.00	2.70	1.50	0.73	3.87	2.20	0.97	0.52
反电动势常数的温度系数 Derating Temp. Coeff. Of Back EMF	Dke/Dt	[%/°C]	-0.12															
额定电压 /Nominal Voltage	Vn	[V]	410	367	402	388	393	388	346	381	390	385	380	379	349	388	339	374
功率损耗 /Losses	Loss	[KW]	1.72	1.73	1.72	1.75	2.40	2.41	2.36	2.36	3.37	3.36	3.37	3.38	3.94	3.95	3.94	3.86
效率 /Efficiency	Eff	[%]	91	93	95	95	92	94	95	96	93	95	95	96	93	95	96	97
电压 380V 时的拐点速度 Knee Speed @ 380Vac	nknee1	[rpm]	924	1555	1890	2936	966	1469	2200	2992	972	1479	2001	3008	1091	1469	2246	3051
电压 480V 时的拐点速度 Knee Speed @ 480Vac	nknee2	[rpm]	1179	1976	2398	3720	1229	1864	2787	3788	1237	1877	2536	3807	1386	1863	2845	3861
电压 380V 时的最大扭矩下的拐点速度 Knee Speed @ 380Vac and Mmax	nknee3	[rpm]	666	1125	1318	2101	679	1045	1503	2020	681	1033	1400	2006	740	990	1507	2084
电压 480V 时的最大扭矩下的拐点速度 Knee Speed @ 480Vac and Mmax	nknee4	[rpm]	855	1435	1677	2668	867	1330	1908	2561	870	1315	1779	2543	943	1258	1912	2641
最大值 /Maximum Values																		
最大转矩 /Max. Torque	Mmax	[Nm]	280				550				830				1100			
最大电流 /Max. Current (peak value)	Imax	[A]	62	101	123	185	125	186	282	374	189	283	377	564	281	375	564	747
380V 时最大速度 Max. Saturation Speed @ 380Vac	nmax1	[rpm]	1107	1811	2213	3325	1143	1699	2576	3416	1143	1713	2286	3416	1283	1713	2576	3416
480V 时最大速度 Max. Saturation Speed @ 480Vac	nmax2	[rpm]	1398	2288	2795	4201	1443	2146	3254	4315	1443	2163	2887	4315	1620	2163	3254	4315
最大机械速度 /Max. Mechanical Speed	nmax	[rpm]	6000															
机械参数 /Mechanical Data																		
转子惯量 /Inertia	Jm	[Kgcm²]	225				410				593				780			
重量 /Mass	M	[Kg]	90				130				170				210			
制动器的机械参数 /Technical Data of the Holding Brake																		
制动转矩 /Holding Torque	MBr	[Nm]	300															
额定电压 (±10%) Rated Voltage (±10%)	UBr	[Vdc]	24															
额定电流 /Rated Current	IBr	[A]	1.74															
重量 /Mass	MBr	[Kg]	18															
惯量 /Inertia	JBr	[Kgcm²]	200															
电机增加的长度 Addditional Motor Length	Length	[mm]	80															

测试条件 / Test Condition
1) 电机水平放置在自由静止空气中，环境温度 30°C / Motor tested in horizontal position in free still air, ambient temperature 30°C
2) 如果 Id0>=150A，电机长度增加 40mm / If Id0 >= 150A: + 40mm of addtional length
3) 典型公差值 ±10% / Typical data tolerance ±10%
4) PTC130 的报警温度 130°C / Treshold of built in PTC 130°C
5) 斩波频率 8kHz / Chopper frequency 8kHz

Type	A1 (mm)		A2 (mm)	L1 (mm)	L2 (mm)	L3 (mm)	B1 (mm)	D1	H1 (mm)
	In ⩽ 150A	In > 150A							
U31310F	459.5	499.5	262	112	90	10	14	48j6	51.5
U31320F	566.5	606.5	370	112	90	10	14	48j6	51.5
U31330F	673.5	713.5	476	112	90	10	14	48j6	51.5
U31340F	780.5	820.5	583	112	90	10	18	60m6	64

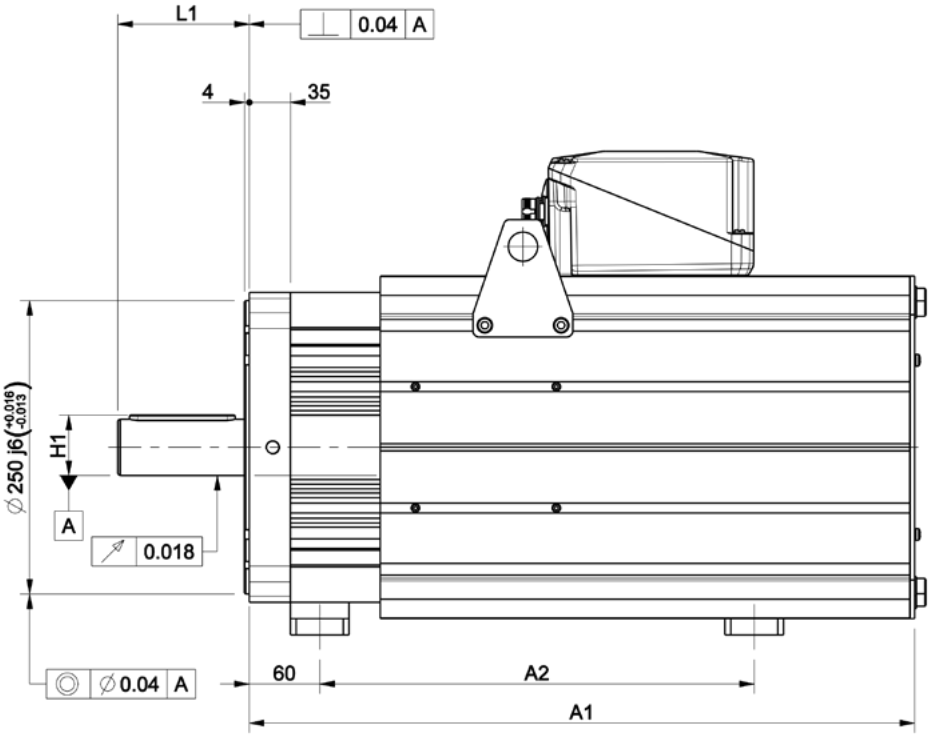

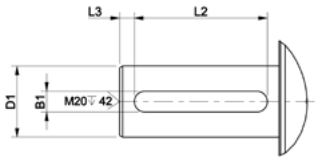

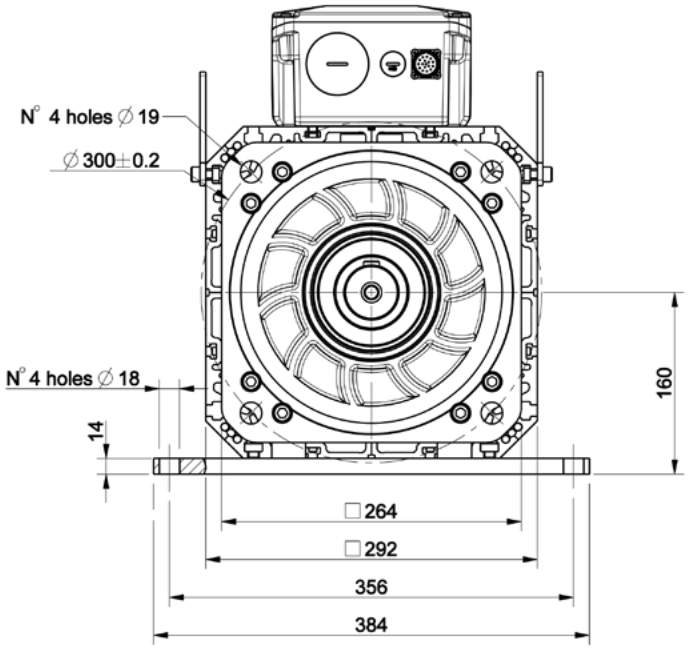

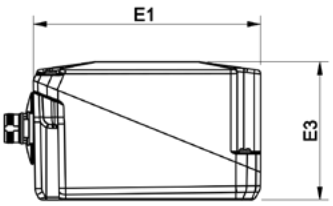

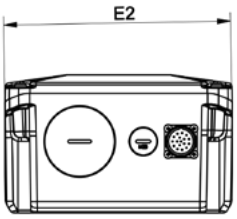

Box option （压铸铝）			
E1	E2	E3	Current
175	175	106.3	30A≤In<125A
240	195	122	125A≤In<200A
353	264	157.5	200A≤In<340A
353	264	157.5	340A≤In<600A

U313__C MOTOR

电机型号 /Motor Code			U31310C				U31320C				U31330C				U31340C			
额定转速 /Rated Speed	nM	[rpm]	1000	1500	2000	3000	1000	1500	2000	3000	1000	1500	2000	3000	1000	1500	2000	3000
堵转转矩 /Stall Torque 2)	Md0	[Nm]	180				360				540				720			
堵转电流 /Current @ Stall Torque 2)	Id0	[A]	43	65	72	108	84	149	168	222	134	223	267	333	149	268	335	445
极数 /Number of Poles	2p		8															
额定值 /Nominal Rating																		
额定转矩 /Rated Torque 2)	MdN	[Nm]	179	178	178	175	357	354	353	348	539	534	530	520	715	713	710	700
额定电流 /Rated Current 2)	IdN	[A]	43	64	71	105	83	146	164	215	134	221	262	321	148	266	331	432
额定功率 /Rated Power	PdN	[kW]	19	28	37	55	37	56	74	109	56	84	111	163	75	115	149	220
电压常数 /Voltage Constant 3)	Ke	[V/1000rpm]	287	191	172	114	296	166	148	111	277	166	139	111	333	184	148	111
扭矩常数 /Torque Constant 3)	Kt	[Nm/A]	4.74	3.16	2.84	1.89	4.89	2.75	2.44	1.84	4.58	2.75	2.30	1.84	5.50	3.05	2.44	1.84
温升 100°C时扭矩常数 Torque Constant @ 130°C 3)	Kt100	[Nm/A]	4.17	2.78	2.50	1.66	4.30	2.42	2.15	1.62	4.03	2.42	2.02	1.62	4.84	2.68	2.15	1.62
线电阻 /Winding Resistance 3)	Ru-v	[Ω]	0.560	0.247	0.200	0.090	0.243	0.080	0.060	0.034	0.135	0.049	0.034	0.022	0.127	0.039	0.026	0.015
线电感 /Winding Inductance 3)	Lu-v	[mH]	12.50	5.53	4.90	2.00	7.10	2.24	1.80	1.00	4.20	1.50	1.05	0.73	4.50	1.38	0.97	0.52
反电动势常数的温度系数 Derating Temp. Coeff. Of Back EMF	Dke/Dt	[%/°C]	-0.12															
额定电压 /Nominal Voltage	Vn	[V]	364	357	437	419	379	315	372	413	357	315	349	425	424	348	382	418
功率损耗 /Losses	Loss	[KW]	2.05	2.03	2.04	2.07	3.34	3.48	3.31	3.30	4.76	4.79	4.75	4.80	5.52	5.51	5.63	5.63
冷却水流量 /Minimum Flow Rate	Flow	[L/min]	5				8				11				14			
效率 /Efficiency	Eff	[%]	86	93	95	96	92	94	96	97	92	95	96	97	93	95	96	98
电压 380V 时的拐点速度 Knee Speed @ 380Vac	nknee1	[rpm]	1047	1601	1735	2716	1003	1819	2045	2759	1069	1816	2184	2679	893	1639	1992	2723
电压 480V 时的拐点速度 Knee Speed @ 480Vac	nknee2	[rpm]	1336	2036	2203	3443	1277	2308	2593	3495	1360	2303	2768	3393	1137	2079	2524	3448
电压 380V 时的最大扭矩下的拐点速度 Knee Speed @ 380Vac and Mmax	nknee3	[rpm]	809	1244	1318	2101	773	1406	1573	2127	821	1400	1681	2006	689	1271	1507	2084
电压 480V 时的最大扭矩下的拐点速度 Knee Speed @ 480Vac and Mmax	nknee4	[rpm]	1036	1585	1677	2668	987	1787	1997	2698	1047	1779	2134	2543	879	1614	1912	2641
最大值 /Maximum Values																		
最大转矩 /Max. Torque	Mmax	[Nm]	280				550				830				1100			
最大电流 /Max. Current (peak value)	Imax	[A]	74	111	123	185	141	250	282	374	227	377	451	564	250	451	564	747
380V 时最大速度 Max. Saturation Speed @ 380Vac	nmax1	[rpm]	1326	1989	2213	3325	1285	2286	2576	3416	1372	2286	2733	3416	1143	2061	2576	3416
480V 时最大速度 Max. Saturation Speed @ 480Vac	nmax2	[rpm]	1675	2512	2795	4201	1624	2887	3254	4315	1733	2887	3452	4315	1443	2603	3254	4315
最大机械速度 /Max. Mechanical Speed	nmax	[rpm]	6000															
机械参数 /Mechanical Data																		
转子惯量 /Inertia	Jm	[Kgcm²]	225				410				593				777			
重量 /Mass	M	[Kg]	95				120				150				190			
制动器的机械参数 /Technical Data of the Holding Brake																		
制动转矩 /Holding Torque	MBr	[Nm]	300															
额定电压 (±10%) Rated Voltage (±10%)	UBr	[Vdc]	24															
额定电流 /Rated Current	IBr	[A]	1.74															
重量 /Mass	MBr	[Kg]	18															
惯量 /Inertia	JBr	[Kgcm²]	200															
电机增加的长度 Addditional Motor Length	Length	[mm]	80															

测试条件 / Test Condition
1) 电机水平放置在自由静止空气中，环境温度 30°C / Motor tested in horizontal position in free still air, ambient temperature 30°C
2) 进水口温度最高 20°C / Water inlet temperature max 20°C
3) 典型公差值 ±10% / Typical data tolerance ±10%
4) PTC130 的报警温度 130°C / Treshold of built in PTC 130°C
5) 斩波频率 8kHz / Chopper frequency 8kHz
6) 如果 Id0>=150A，电机长度增加 40mm / If Id0 >= 150A: + 40mm of addtional length

Type	A1 (mm)		A2 (mm)	A3 (mm)	A4 (mm)	L1 (mm)	L2 (mm)	L3 (mm)	B1 (mm)	D1	H1 (mm)
	In ⩽ 150A	In > 150A									
U31310C	332		200	121.4	63.7	112	90	10	14	48j6	51.5
U31320C		479	307	135	160	112	90	10	14	48j6	51.5
U31330C		586	414	141	253	112	90	10	18	60m6	64
U31340C		693	521	141	360	112	90	10	18	60m6	64

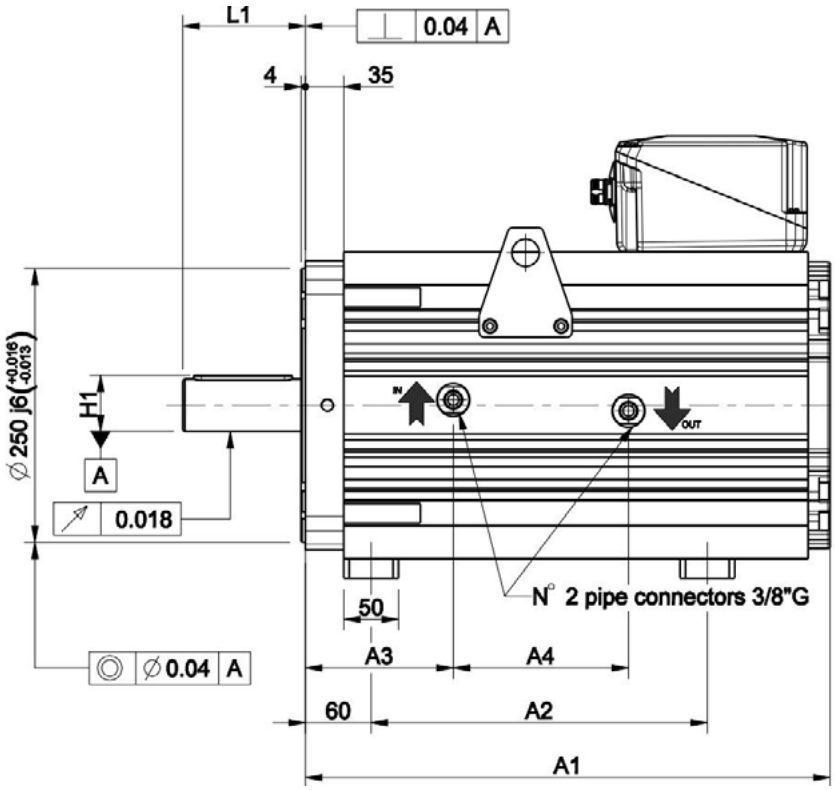

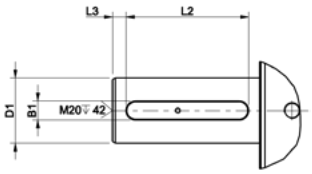

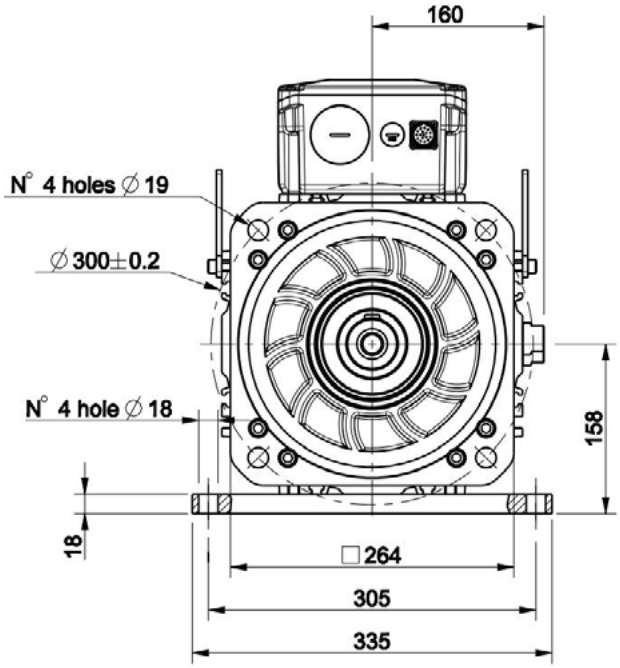

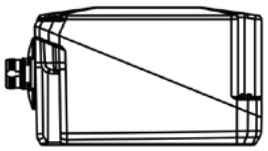

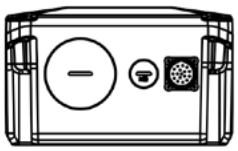

Box option （压铸铝）			
E1	E2	E3	Current
175	175	106.3	30A≤In<125A
240	195	122	125A≤In<200A
353	264	157.5	200A≤In<340A
353	264	157.5	340A≤In<600A

U318__F MOTOR

电机型号 /Motor Code			U318035F	U318050F	U318060F	U318070F	U318100F
额定转速 /Rated Speed	nM	[rpm]	1500	1500	1500	1500	1500
堵转转矩 /Stall Torque 2)	Md0	[Nm]	579	761	932	1095	1398
堵转电流 /Current @ Stall Torque 2)	Id0	[A]	169	209	273	321	384
极数 /Number of Poles	2p		12				
额定值 /Nominal Rating							
额定转矩 /Rated Torque 2)	MdN	[Nm]	478	623	748	869	1103
额定电流 /Rated Current 2)	IdN	[A]	151	185	237	275	328
额定功率 /Rated Power	PdN	[kW]	75	98	118	137	173
电压常数 /Voltage Constant 3)	Ke	[V/1000rpm]	216	231	216	216	231
扭矩常数 /Torque Constant 3)	Kt	[Nm/A]	3.58	3.82	3.58	3.58	3.82
温升 100°C时扭矩常数 Torque Constant @ 130°C 3)	Kt100	[Nm/A]	3.32	3.54	3.32	3.32	3.54
线电阻 /Winding Resistance 3)	Ru-v	[Ω]	0.045	0.035	0.023	0.018	0.015
线电感 /Winding Inductance 3)	Lu-v	[mH]	0.616	0.526	0.37	0.308	0.263
反电动势常数的温度系数 Derating Temp. Coeff. Of Back EMF	Dke/Dt	[%/°C]	-0.12				
额定电压 /Nominal Voltage	Vn	[V]	317	337	314	313	333
功率损耗 /Losses	Loss	[KW]	3.01	3.54	4.06	4.52	5.3
效率 /Efficiency	Eff	[%]	96	97	97	97	97
电压 380V 时的拐点速度 Knee Speed @ 380Vac	nknee1	[rpm]	1796	1687	1811	1816	1707
电压 380V 时的最大扭矩下的拐点速度 Knee Speed @ 380Vac and Mmax	nknee3	[rpm]	1521	1429	1533	1536	1440
最大值 /Maximum Values							
最大转矩 /Max. Torque	Mmax	[Nm]	1346	1795	2244	2692	3590
最大电流 /Max. Current (peak value)	Imax	[A]	380	475	633	759	949
最大速度 /Max. Speed Deflux	nmax1	[rpm]	2000				
最大机械速度 /Max. Mechanical Speed	nknee	[rpm]	4000				
机械参数 /Mechanical Data							
转子惯量 /Inertia	Jm	[Kgcm²]	2820	3660	4500	5340	7010
重量 /Mass	M	[Kg]	285	350	395	435	520

测试条件 / Test Condition
1) 电机水平放置在自由静止空气中，环境温度 30°C / Motor tested in horizontal position in free still air, ambient temperature 30°C
2) 典型公差值 ±10% / Typical data tolerance ±10%
3) PTC130 的报警温度 130°C / Treshold of built in PTC 130°C
4) 斩波频率 8kHz / Chopper frequency 8kHz

Type	A1 (mm)	A2 (mm)	L1 (mm)	L2 (mm)	L3 (mm)	B1 (mm)	D1	H1 (mm)
U318035F	700	348	140	125	6	18	60m6	64
U318050F	764	412	170	140	10	22	80m6	85
U318060F	828	476	170	140	10	22	80m6	85
U318070F	892	540	170	140	10	22	80m6	85
U318100F	1020	670	170	140	10	25	90m6	95

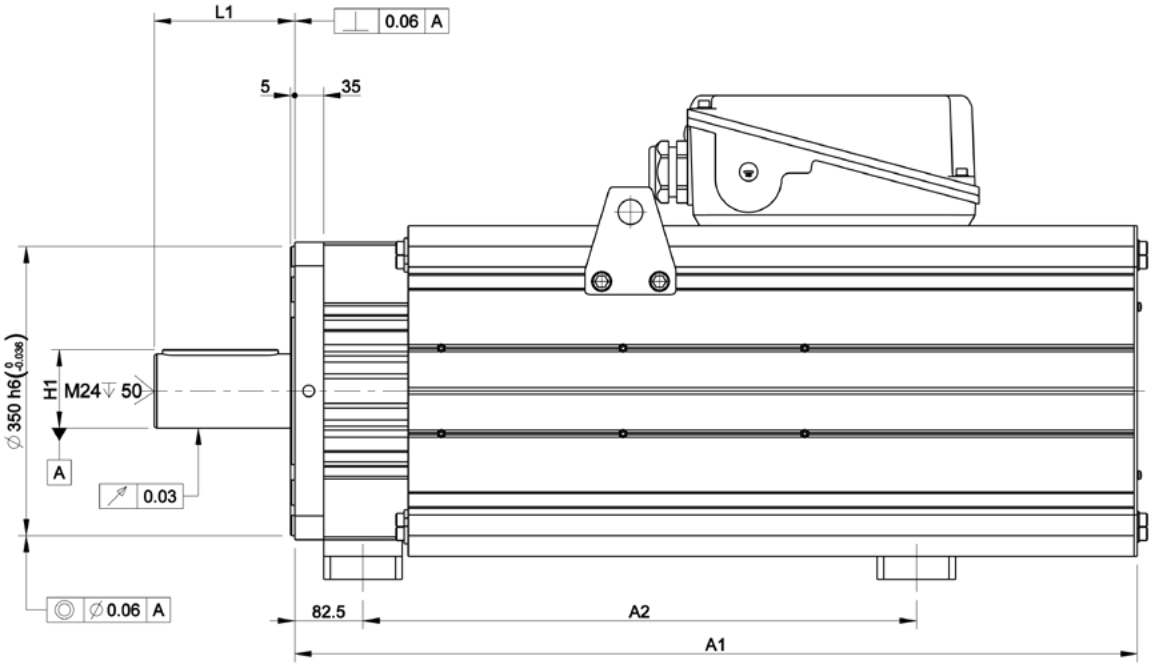

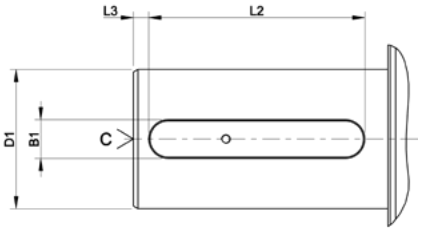

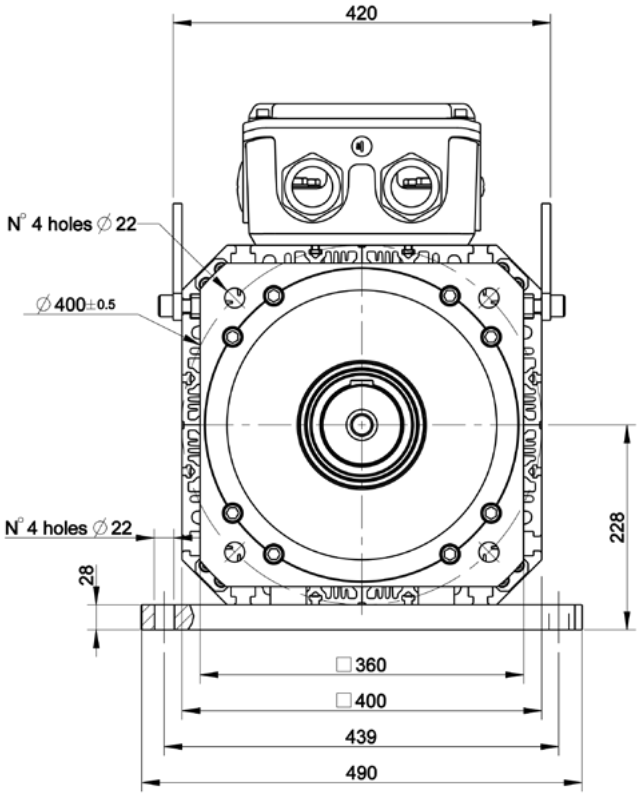

U318__C MOTOR

电机型号 /Motor Code			U318035C		U318070C		U318100C	
额定转速 /Rated Speed	nM	[rpm]	1000	2000	1000	2000	1000	2000
堵转转矩 /Stall Torque 2)	Md0	[Nm]	550		1100		1600	
堵转电流 /Current @ Stall Torque 2)	Id0	[A]	97	194	194	388	317	635
极数 /Number of Poles	2p		12					
额定值 /Nominal Rating								
额定转矩 /Rated Torque 2)	MdN	[Nm]	500	497	1000	980	1540	1480
额定电流 /Rated Current 2)	IdN	[A]	88	175	176	345	305	588
额定功率 /Rated Power	PdN	[kW]	52	104	105	205	161	310
电压常数 /Voltage Constant 3)	Ke	[V/1000rpm]	390	195	390	195	347	173
扭矩常数 /Torque Constant 3)	Kt	[Nm/A]	6.45	3.23	6.45	3.23	5.74	2.86
温升 100°C时扭矩常数 Torque Constant @ 130°C 3)	Kt100	[Nm/A]	5.68	2.84	5.68	2.84	5.05	2.52
线电阻 /Winding Resistance 3)	Ru-v	[Ω]	0.16	0.042	0.059	0.015	0.032	0.009
线电感 /Winding Inductance 3)	Lu-v	[mH]	2.2	0.55	1.1	0.45	1.04	0.27
反电动势常数的温度系数 Derating Temp. Coeff. Of Back EMF	Dke/Dt	[%/°C]	-0.12					
额定电压 /Nominal Voltage	Vn	[V]	416	410	413	429	395	391
冷却水流量 /Minimum Flow Rate	Flow	[L/min]	8		11		14	
功率损耗 /Losses	Loss	[KW]	3.24	3.41	4.79	4.87	6.94	7.85
效率 /Efficiency	Eff	[%]	95	95	94	94	95	95
电压 380V 时的拐点速度 Knee Speed @ 380Vac	nknee1	[rpm]	911	1852	919	1769	961	1944
电压 480V 时的拐点速度 Knee Speed @ 380Vac	nmax2	[rpm]	1159	2347	1167	2239	1219	2461
电压 380V 时的最大扭矩下的拐点速度 Knee Speed @ 380Vac and Mmax	nmax3	[rpm]	714	1482	741	1211	662	1314
电压 480V 时的最大扭矩下的拐点速度 Knee Speed @ 380Vac and Mmax	nmax4	[rpm]	917	1888	946	1537	843	1667
最大值 /Maximum Values								
最大转矩 /Max. Torque	Mmax	[Nm]	1300		2500		3500	
最大电流 /Max. Current (peak value)	Imax	[A]	252	504	484	969	762	1529
380V 时最大速度 /Max. Speed Deflux	nmax1	[rpm]	974	1949	974	1949	1095	2197
480V 时最大速度 /Max. Speed Deflux	nmax2	[rpm]	1231	2462	1231	2462	1383	2775
最大机械速度 /Max. Mechanical Speed	nmax	[rpm]	4000					
机械参数 /Mechanical Data								
转子惯量 /Inertia	Jm	[Kgcm²]	2820		5340		7010	
重量 /Mass	M	[Kg]	265		380		455	

测试条件 / Test Condition
1) 电机水平放置在自由静止空气中，环境温度 30°C / Motor tested in horizontal position in free still air, ambient temperature 30°C
2) 电机使用法兰安装 (法兰温度 30°C) / Motor flanged (Tflange = 30°C)
3) 典型公差值 ±10% / Typical data tolerance ±10%
4) PTC130 的报警温度 130°C / Treshold of built in PTC 130°C
5) 斩波频率 8kHz / Chopper frequency 8kHz

Type	A1 (mm)	A2 (mm)	L1 (mm)	L2 (mm)	L3 (mm)	B1 (mm)	D1	H1 (mm)
U318035C	515	348	140	125	6	18	60m6	64
U318070C	707	540	170	140	10	22	80m6	85
U318100C	835	670	170	140	10	25	90m6	95

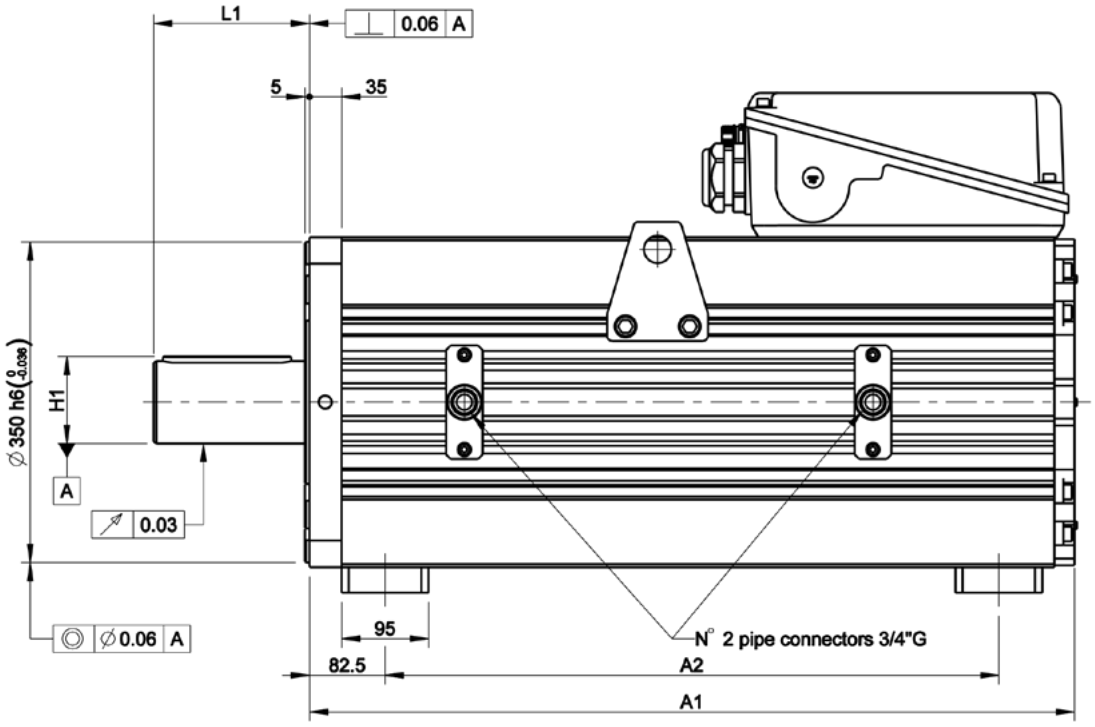

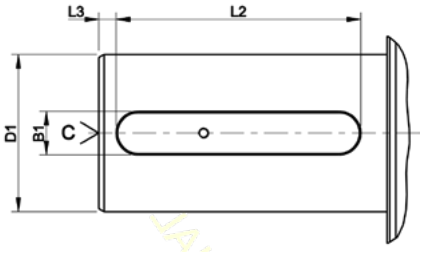

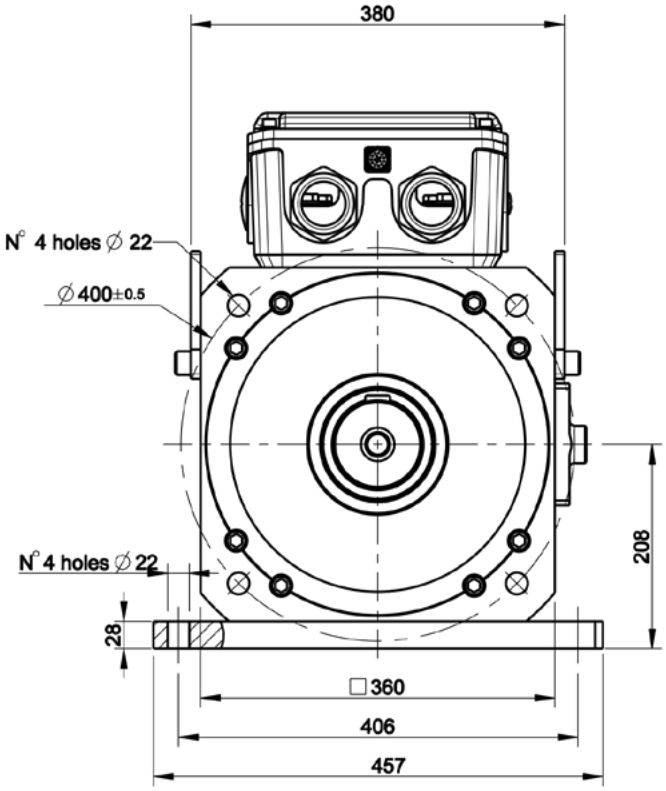

Motor Performance Curves
电机性能曲线

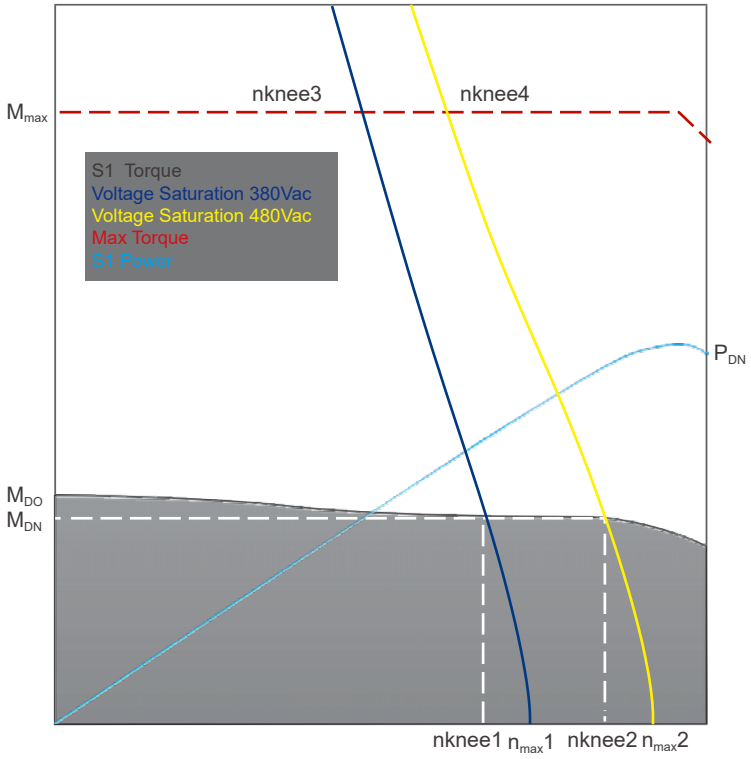

热衰减
Thermal Derating

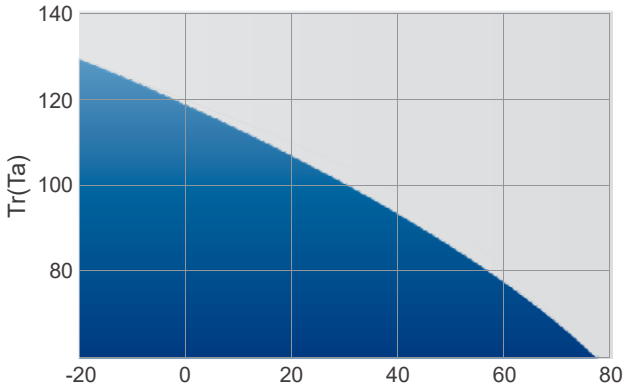

允许扭矩比例（% of Md0）（纵坐标）和环境温度（横坐标）的关系
Permissible torque vs. ambient temperature, % of Md0

过载
Overload Rating

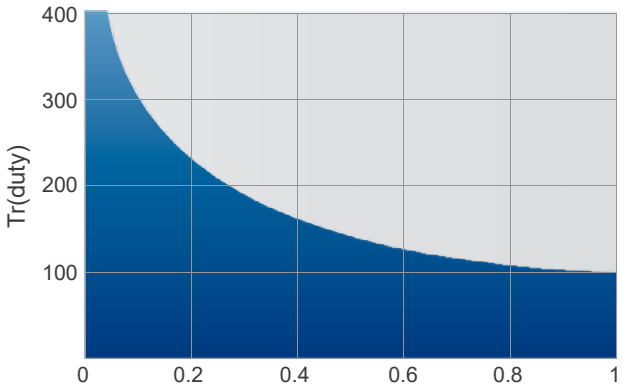

允许扭矩过载比例（纵坐标）和负载运行时间占比（横坐标）的关系
Permissible torque overload vs. duty cycle, all motors.

Motor Connections
电机接线

信号 Signal

信号插座 /Signal Connector M23-17 Pin
EnDat Type Mx, Nx

PIN	Function	AxM Port E1
1	A +	n.c.
2	A -	n.c.
3	DATA +	14
4	PTC +	8
5	CLOCK +	3
6	n.c.	n.c.
7	0 V	1
8	KTY84 +	n.c.
9	KTY84 –	n.c.
10	+ Vac	
11	B +	n.c.
12	B –	n.c.
13	DATA –	9
14	CLOCK –	4
15	0V sense	n.c.
16	Vac sense	n.c.
17	PTC –	1

信号插座 /Signal Connector M23-17 Pin
Resolver Type R

PIN	Function	AxM Port E1 PIN
1	n.c.	n.c.
2	n.c.	n.c.
3	n.c.	n.c.
4	Sin -,1 c/r	5
5	Cos +,1 c/r	3
6	Cos -,1 c/r	4
7	Resex-	10
8	KTY84 +	n.c.
9	KTY84 -	n.c.
10	Resex -	11
11	n.c.	n.c.
12	n.c.	n.c.
13	n.c.	n.c.
14	Sin +,1 c/r	2
15	n.c.	n.c.
16	PTC +	8
17	PTC -	1

信号插座 /Signal Connector M23-17 Pin
SinCos Encoder Type S1

PIN	Function	AxV Port S2 PIN	AxM Port E1 PIN
1	A +	1	7
2	A -	14	12
3	I + (index)	3	14
4	Sin –, 1 c/r	6	5
5	Cos +, 1 c/r	17	3
6	Cos -, 1 c/r	5	4
7	0 V	10	1
8	PTC +	11	8
9	PTC – / KTY –	13	1
10	+ Vcc (5Vdc)	25	6
11	B +	2	15
12	B -	15	13
13	I – (index –)	16	9
14	Sin +, 1 c/r	18	2
15	0V sense	n.c.	n.c.
16	+ Vcc sense	n.c.	n.c.
17	KTY +	n.c.	n.c.

电源（U303/305/307）
Power（Size 303,305,307）

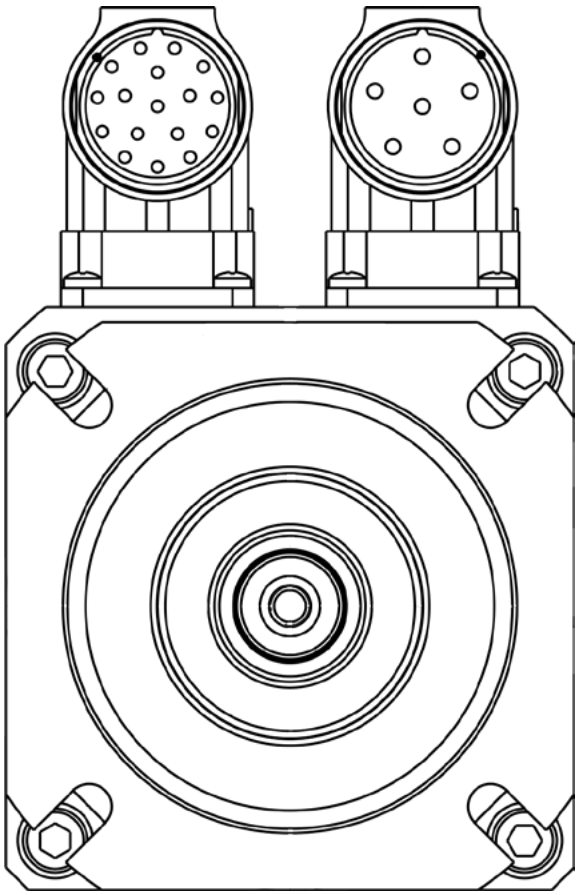

接线 /Wiring

使用屏蔽率 >85% 的屏蔽电缆
当电缆长度超过 20m 时，需要接入一个> 1mH 的电感。

Use shielded cable only, with shield cover- age > 85%
Power cables longer than 20 meters may Insert series induc-tance > 1mH.

编码器 /Encoder

在工厂完成调零，匹配菲仕驱动器的情况下不需要另外匹配编码器零位。

Phasing performed at factory, no further phasing is necessary if the motor is coupled to the drives of Physis.

电源插座 /Power Connector
M23 Size 1- 5+ PE

针脚号 /PIN	描述 /Description
1	Phase A
2	Phase B
3	GND
4	制动器 /BR + (Option)
5	制动器 /BR - (Option)
6	Phase C

电机额定电流≤ 30Arms
For motors with Inom <= 30 Arms

电源插座 /Power Connector
M40 Size 1,5-2+3+PE

针脚号 /PIN	描述 /Description
U	Phase A
V	Phase B
W	Phase C
⏚	GND
+	制动器 /BR + (Option)
–	制动器 /BR - (Option)

电机额定电流> 30Arms
For motors with Inom > 30 Arms

电源（U310/313/318）
Power（Size 310,313,318）

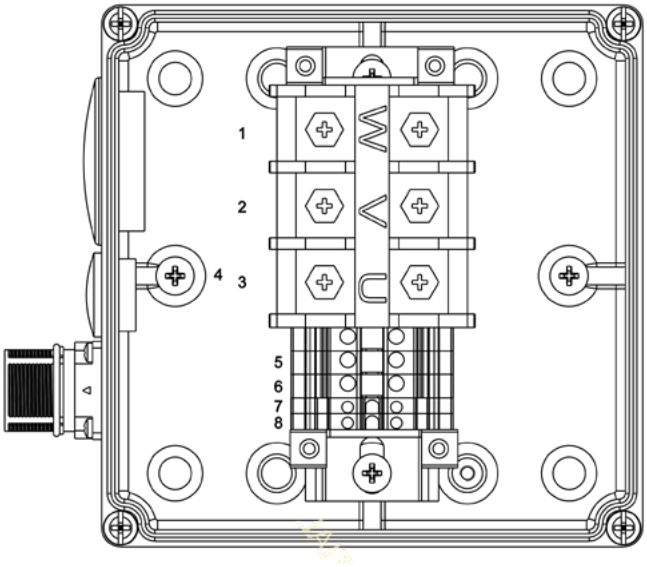

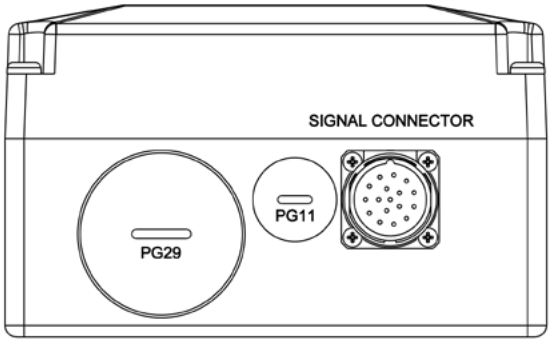

接线盒 142×142
CONNECTION BOX 142×142

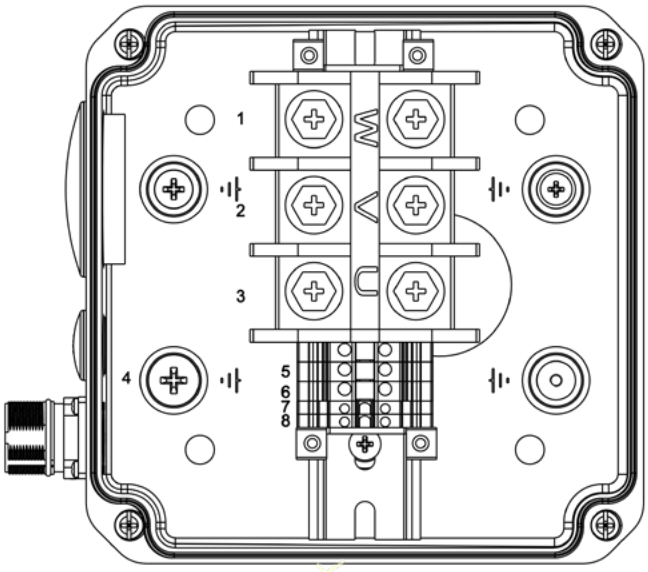

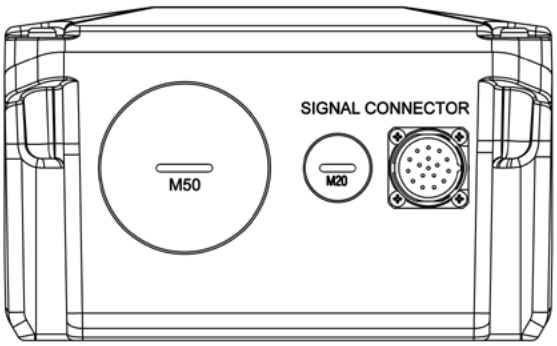

接线盒 175×175
CONNECTION BOX 175×175

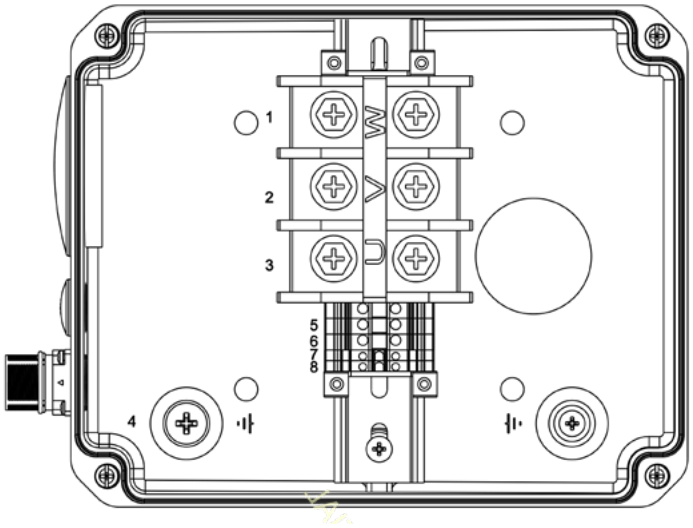

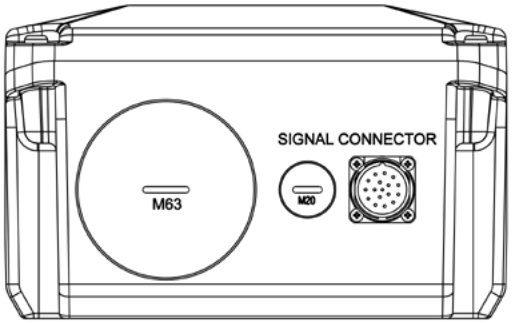

接线盒 240×195
CONNECTION BOX 240×195

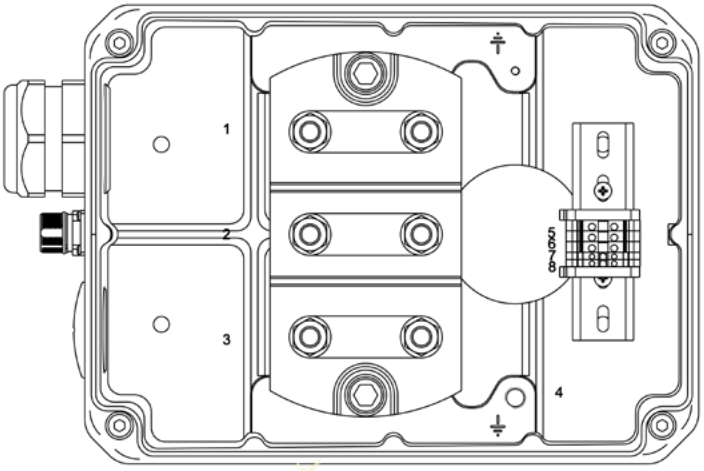

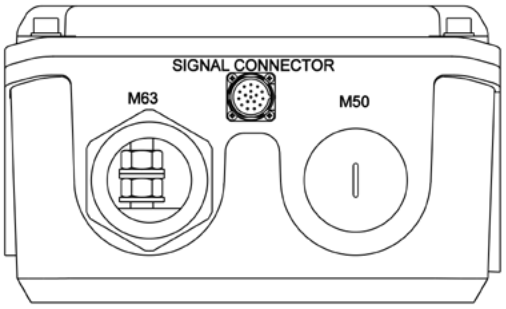

接线盒 353×264
CONNECTION BOX 353×264

	接线定义 /Connection box configuration
1	Phase W
2	Phase V
3	Phase U
4	GND
5	风扇 /Fan *
6	风扇 /Fan *

	接线定义 /Connection box configuration
7	制动器 Brake (+ 24V) *
8	制动器 Brake (0V) *
9	内部接线用 /Reserved for internal use*
10	内部接线用 /Reserved for internal use*
11	内部接线用 /Reserved for internal use*

(*) 如果存在的情况下
If present!

Safety Brake Specification
安全制动说明

电机型号 Motor size		U303	U305	U307	U310	U313
最小静态力矩 (120°C) Min. static torque（120°C）	Nm	4	9	32	140	300
制动时间 Operate time	ms	15	25	40	100	300
释放时间 Release time	ms	40	40	100	180	350
释放电压 Release voltage	Vdc+/-10%	24				
释放电压 Release voltage	Adc	0.58	0.75	1.08	2.3	1.7
附加重量 Additional mass	kg	0.65	1	3	11	18
惯量 Inertia	$mkgm^2$	0.022	0.065	0.6	5.6	20
电机转矩衰减 Torque derating of motor	%	9.5	8	8.6	6.5	4.8
电机长度增加量 Additional motor length	mm	30	33	50	65	80

对于最短电机，如果制动后不降低电压，在 65°C Δ T 时，电机转矩衰减为此值。如果制动后将电压降低到 12V，或强制冷却，电机转矩衰减将小于 2%

Derating of nominal torque at 65°C ΔT , for the shortest motor in the size, without voltage reduction after operate. For voltage reduction at 12V after operate, or forced cooling, derating < 2%.

Motor & Machine Protetion
电机和机器保护

PTC Characteristics

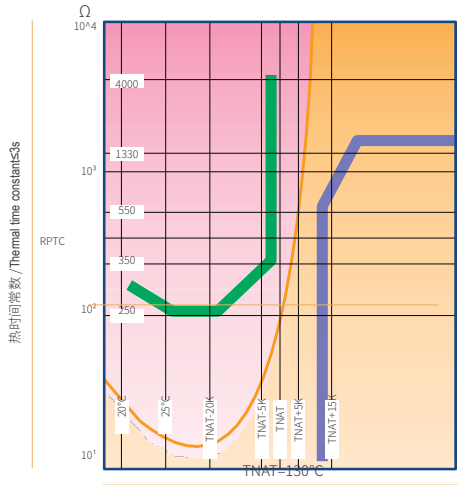

保护传感器 PTC 的电阻与温度关系 /Protection device (PTC) resistance vs. temperature Green and blue bands: limits of PTC tolerance values

KTY Thermal Sensor, option W

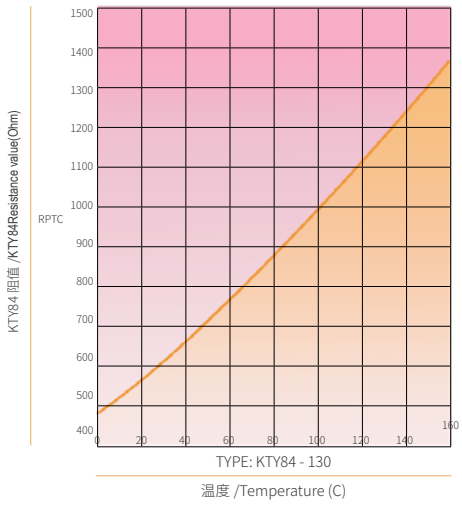

前言

目前，基于稀土永磁体的交流无刷伺服驱动系统，能提供最高水平的动态响应和扭矩密度。所以拖动系统的发展趋势是用无刷伺服驱动取替传统的液压、直流、步进和AC 变频调速驱动，以便使系统性能达到一个全新的水平，包括更短的周期、 更高的生产率、更好的可靠性和更长的寿命。为了实现用新的电机更好地改善系统性能，就必须对这一技术特点有一个深刻的理解。事实上，如果仅简单用新的驱动技术取代传统的电机，而未进行新的设计，将会产生一些意想不到的问题，并且有时候甚至会使机器的特性降低。

在对这些新的驱动技术缺乏基本了解的前提下，本使用指南，可为您提供新开发应用最佳解决方案的基本思路。如遇某些应用场合，所需性能和电机的选择有争议或另有更好的解决方案，请与我们联系。

驱动及机械连接的选择

所有驱动应用的成功都取决于对全部系统参数的仔细选择。因而就需要对现代 无刷驱动系统的性能指标做到很好的理解（有些性能参数非常高，但要完全理解却比较困难）。事实上，无刷驱动系统并不单纯的取决于电机，而是一个完整的复杂的控制系统，这就导致了在设计上具有更 大的自由度，比传统的驱动装置需要选择更多的参数。

从概念性的观点来看，一个高性能的无刷电机驱动系统类似于在标准磁感电机 上，增加了一组扬声器的功放。从而使电 机具有非常短的响应时间及有限的惯性， 因此可使电机尽最大限度的适应各种控制信号。就像扬声器一样，最终的控制品质 更多的是依靠所选择的系统参数和驱动条件而不是依靠电机本身。

系统设计者面对设计选择，不但要考虑机械、电子和电力等方面得各种参数，同时还要考虑其相互间的影响。总体来说，所有系统都要求做下述两个基本选择：

① 机械方面：机械联动装置的选择，传动比的选择，转换方式的选择，以及联轴器和离合器的选择。

② 电子方面：反馈方式，传感器类型和数量的选择，传感器的安装方式，放大器的类型，同步和控制总线等的选择。

下面内容，可帮助设计者针对应用特征的功能进行选择。

无刷驱动：操作规则，性能特征和限制

所有的无刷伺服系统包括：电力驱动、伺服电机和至少一个反馈传感器。所有这些部件都在一个控制闭环系统中运行：驱动器从外面接收指令信息，然后将电流输送给电机；通过电机转换成扭矩，然后带动负载；负载根据他自己的特性进行动作或加速；传感器测量负载的位置，使驱动装置对指令信息值和实际位置值进行比较；然后通过改变电机电流使实际位置值和指令信息值保持一 致。

例如：要求一个恒定速度，驱动装置将不断增加电机电流直到电机实际速度和要求速度一致。如果负载突然加大，速度将被减小，传感器捕捉出这种速度改变，驱动器通 过增加电机扭矩去满足负载的增加，并重新返回到设定的速度。通过这个例子，可得出如下结论：

● 速度精度几乎与负载和电机无关，而只取决于传感器信号的质量和驱动器的速度与控制算法。

● 负载波动与速度校正之间的时间滞后，完全取决于速度、传感器的分辨率以及电力驱动装置的参数设置。

现代无刷伺服驱动系统由于具备非常高的闭环特性，可在毫秒级或者更小的时间滞后中就能够对传感器信号作出反应。

然而，在这一点上，通过机械联轴器的传递时间通常成了系统响应效果的最主要限制。

例如：假设有一个系统，用伺服电机通过同步齿形带驱动一个恒定速度的、大惯性的负载。齿形带有效、定长且有弹性。试想，要获得毫秒级的速度校正能力，可得出下列结论：

1) 驱动器一旦将电流送到电机，电机须立即产生扭矩。

2) 一开始，齿形带会变形伸长，负载不会加速到像电机那样快。

3) 从而因此，电机比负载提前到达设定的速度，装在电机上的传感器则返回信息削弱电流，继而终削弱扭矩。

4) 随着齿形带的张力的不断增加使电机速度变慢，迫使驱动器又去增加电流，一个新的周期又开始了。

在这个例子中，系统是振荡的，电机扭矩是脉动式的，负载速度也随之脉动。其结果是噪音、过热和磨损，这没有一样是由于电机的缘故。然而肤浅的使用者将认为电机是噪音源，事实上，如果用老式的大机座大惯性电机更换电机，这种问题就有可能消失，这就给人一种错觉，似乎新的驱动系统并不是很有效。

这种简单的理解是错误的，事实上，分析以上例子：

①这种不稳定性，是由于系统反应速度（快）与机械传递或者反应时间（慢），不相匹配而引起。即电机反应快于系统调整新的扭矩所需的时间。

②可行的解决方案是：其一：要么，减少机械系统的反应时间—通过增强联轴器的刚性和降低系统惯性；如直接驱动或用齿轮箱代替齿形带。要么降低控制系统的速度—通过放弃一些控制带宽；而这需要用新的技术来实现。其二：当然要牺牲一些品质，如降低对突变负载波动的快速反应能力。事实上，老式驱动装置都很慢，他是用大电机的惯性补偿速度的不 足。另一方面，由于无刷电机的惯性是很小的，因而就需要一个好的控制带宽以保证良好的旋转精度。所有这些都可说表明，为什么无刷电机驱 动系统与机械方面精度差，如反向间隙、键槽等 因素特别敏感。因为这个原因，最好的电机都制造成不带键槽的圆形光轴，并采用带锥度的紧配件连接。其输出轴和法兰均需精密加工，以便省去柔性连接器。如果必须有柔性连接器，那他必须有抗扭刚性，如金属波纹管型。

结论：

由于传统驱动系统（永磁直流电机，交流变频电机）自身的惯性和响应时间限制了其使用性能，因而具有更好应用性能的高水平新型无刷驱动系统就需克服传统应用场合的诸多机械限制。

因此，今天机械系统的设计验证或系统升级，比以往任何时候都更为重要。 新方案的成功与否与整个系统的动态设计密切相关。

从上面简单的例子中还可以得出以下准则：

● 速度精度只取决于传感器，而与电机无关。

● 跟随速度和对突变负载波动的补偿能力，完全取决于机械连接器的刚性和品质。

在差的或改型后较差的应用系统中，经常听到的噪音，既不是来源于电机，也不是驱动器，而是来源于“原始的”机械连接器。事实上，噪音是由于电机“捕捉”正确扭矩而产生，在这种情况下，电机有可能产生与负载无关的过热。 在同一系统中，老式电机也许会正常工作，这是由于大基座电机的惯性，“掩盖了”其所有的不足。

对应用系统动态要求的分析是选择电机的基础。

为达此目的，这一广泛的概念可分解为两个因素：

● 大信号带宽：这是产生足够扭矩和速度的根本，可在非常短的时间内，迫使负载达到理想的运行轨迹。这完全取决于电机、负载扭矩和系统惯性，且须将系统所有部件按无 限刚性部件进行研究。

● 小的信号带宽或控制带宽：其数值与稳定时间的倒数相关。一般需低于系统中的任何 机械共振频率，其倒数值为控制环的稳定时间（如在满足所需精度的前提下，在运动命令的末尾，要达到目标位置所需的时间）。典型的，要想使稳定时间达到所有负载和连 接器上振荡或共振所需滞后时间的 2—3 倍，一般是不可能的。

举个例子，假设有一台高速冲床的分度轴 , 其额定速率定为 10 次 / 秒，即工件位置每 秒变化 10 次。如果整个传动链（轴、减速器、传动带、滚珠丝杠等）的共振频率为 50Hz 系统稳定时间大约 50—60msec，只剩下 40ms ec 去移动和冲切。由于需要非常高的扭矩和加速性能，所以这种应用几乎是不可能的。

然而，如果增强传动链的刚性（如用长丝杠代替传送带等），那么传动链的共振频率可增至 100Hz，稳定时间减少至 25-30msec，移动时间翻倍，所需的扭矩减半，应用也就没有问题。

最优化驱动设计：传动比 转换方式 联轴器

无刷电机的体积大小是由电机输出扭矩来确定的。因此，在所有的应用中，低的电机速度将产生低的额定功率和相对低的效率。另一方面，无刷电机没有最小速度限制（其速度仅由所用的传感器来决定，如某些应用中，其轴的速度是每年转 1 转）, 因此，若有人提议用高速齿轮箱，这只能减少电机的重量（如 电力牵引）或提高效率。从费用或动态性能的观点来看，则不提倡这种方案。无论在什么地方，只要电机直接作用于负载，控制带宽就是最大化的，因为这已达到了最大化的传输刚性。因此，这些应用可提供最佳的位 置控制和具有最短稳定时间的跟随精度。

在为具体系统选择适当驱动方式之前，有必要先了解一下可用的机械传输方式。最常用的传输方式有以下几种:

①旋转到旋转的转换

● 齿形带

● 斜齿轮减速器

● 摆线及外摆线转减速器

● 谐波驱动

● 蜗杆减速器或格里森（Gleason）齿轮

②旋转到直线运动转换

● 齿形带

● 齿轮齿条

● 金属带

● 滚珠丝杠

对任何传输系统来说，负载参数都能按以下方式转换成电机轴的参数。如果 n= 传动比（电机与负载速度之比，若从直线运动转为旋转则为 rad/m）：

● 电机扭矩 = 负载扭矩（或推力）/n

● 电机速度 = 负载速度 *n

● 减至电机轴端的负载惯性 = 负载惯性 (或质量)/n2

在上面列举出来的传输方式中，第一种齿形带是最便宜的，同时也是最慢的，他们只能用于小的控制带宽（小于 10Hz，使用高刚性齿形带），为了避免传输到电机轴的负载惯性远远大于电机本身的惯性，那么选择适当的传动比就尤为重要。齿形带类传输方式不能用于转换时间远小于 1 秒钟的位置控制场合。

如果齿轮减速器的齿隙比系统要求的精度低很多的情况下，齿轮减速器的确是很好的解决方案。最好的减速器（也是最贵的）就是外摆线。有很多特殊系列的摆线和外摆线减速器，是专门针对伺服控制而设计的，其输出轴的齿隙被限制在每分钟 1'-3'。只有这样的减速器才能具体用于控制带宽高于 10Hz 的应用场合。伺服系列减速器均被设计成用刚性联轴器直接与电机轴相连，一般不用键槽。

谐波驱动齿轮箱被设计为专用于位置控制。他具有体积小、传动比大、反向间隙小等特点。其刚性并不是很好，可取得的控制带宽在 10Hz—30Hz 范围。由于效率有限，因而只能用于位置控制场合。

螺杆减速器使用场合有限，这类齿轮虽 然很普通也不贵，但是却不适合位置控制。 蜗杆的效率是依靠有效润滑来决定的，蜗杆 在低速运转时，其效率急剧下降，原因是低 于一定速度时，油膜就无法形成，从而使效 率下降，磨损加剧。

无论在任何地方需要旋转到直线转换， 滚珠丝杠可提供高达 4m/s 的高品质解决方案，特别是当滚珠丝杠直接由电机驱动时，更是如此。低惯量电机的直接驱动一般不再需要扭矩限制离合器。在比较长的移动场合，有必要检查丝杠的抗弯及抗扭刚性，这会限制系统的控制带宽。大位移运动常用齿轮— 齿条来实现，但其较大的反向间隙则会限制系统相应周期，并引起电机噪音。传统的间隙消除方式是增加了楔形条减少非线性，同样利用摩擦轮也可产生相同的效果，但都会对系统周期带来限制。

快速且准确的运动场合，可用金属带代替齿形带以增强刚性。这项技术尚不普及并且没有标准，但是在控制小负载（几公斤）情况下却能达到极好的性能。

然而总的来说，直线电机作为高精度直线运动的控制方式是最佳的。

为了在具体的应用场合选择最适合的减速方式和传动比，先将应用分成两个大类：

①功率伺服：当电机用于功率控制场合（如 主轴、牵引、缠绕、传送等）时，其动态性能非常重要，主要是控制功率。往往电机费用是系统费用的主要组成部分。

②位置控制或宽调速（电子凸轮轴）：在这些应用中，绝大多数能量用于在极短时间内 的加速、制动和目标定位，同时对精度也有或多或少的要求。

从传统意义上说，上面提到的两种方法也可称为主轴驱动和坐标轴驱动。

在第一种情况下，动态特性并不重要，因此简单的减速器就能够满足要求。由于功率常常是相对的，带减速器的机械传输结构通常是很有用的。为了选择最好的传动比，转速需达到 4000RPM，电机成本和体积的减少与传动比的增加成准线性关系。另一方面， 传动系统成本的增加与齿轮级数或滑轮数量密切相关。从应用成本的观点出发，综合成本的最小化主要取决于：

● 可否直接驱动

● 可否只用一级减速就可达到速度所需的最大传动比

● 可否只用两级减速就可达到速度所需的最大传动比

● 依此类推

在这种情况下，通过检查上述因素，并把电机的成本加入减速器的成本一起考虑，就能实现经济最优化。

对所有动态应用（多轴）场合，情况是完全不同的。如果在驱动周期中所要求的扭矩主要是由惯性扭矩（包括电机和负载的惯性）决定的话，那么减速比的增加，则会引起负载冲击惯性的下降和电机冲击惯性的增加。因此，对于惯性负载的应用场合，传动比可由电机的最小扭矩当然也是最小的电机来确定，前提是，负载惯性用该传动比转换到电机轴时，应与电机本身的惯性相当（即惯性匹配）。

基于这一原因，惯性匹配法是长期以来被认为最好的齿轮传动比选择工具。然而，这种方法仅仅是一个提示。事实上，由于高质量减速器的成本是电机的两倍，小型号电机并不适用与低成本应用场合。更进一步说，质量和性能主要是由于齿轮的间隙和轴的弹性变形量来决定，而不是电机本身。因此，传动比的选择只考虑电机的因素存在明显不足。下面是一些更好的规则：

● 任何高于惯性比的传动比都是错误的。

● 最好的传动比总是低于或等于惯性比，并且要考虑电机和减速器的成本。

● 与小的传输比相比，大的传输比会使控制带宽变窄、精度下降、能耗增大。

这些因素充分说明，由直接驱动取代齿轮减速是当前的发展趋势。

无论转换到电机轴的负载惯性比电机本 身惯性大几倍，只要仔细考虑也是可行的，这是因为电机惯性在系统中可能出现的机械共振和负载波动时，并非一成不变。因此，需要具有大的控制带宽，以便用电子方式补偿由惯性本身引起的不足。为此，这些应用中的机械传动机构需要高质量、高刚性、无间隙（无键槽）。

从分析观点来看，完全直接驱动取决于系统的扭转刚性。电机轴首先要有非常好的扭转刚性，这对（虽然在 Ultract III 设计中利用大轴来使其最优化）长而细的电机非常有效。事实上，Ultract III 范围完全覆盖，相同的扭矩既可以通过长而细的电机又可以通过短而粗的电机获得，因为：

● 长电机有最小的运动惯量，适合于低惯性负载及高加速的场合。

● 短粗的电机具有最大的扭转刚性，适合于大惯性负载，一般电机的惯性要比负载惯性小很多。

作为参考：假设一钢制轴，其直径为 D， 长度为 L，那么轴的扭转刚度为：

$$S_m = \frac{\pi}{32} \cdot \frac{D^4}{L} \cdot 78.5 \cdot 10^9 \cdot \frac{N}{m^2}$$

若负载惯量为 JL，轴的扭转刚度为 Sm， 那么负载的扭转共振的频率为：

$$F_1 = \frac{1}{(2 \cdot \pi)} \cdot \sqrt{\frac{s_m}{JI}}$$

在所有用了大惯量和短稳定时间的应用场合，强烈建议（首先）对第一次扭转共振频率进行检测。

控制方式的选择

所有的驱动系统都可以按照三种主要控制方法来分类：

● 力矩控制（速度取决于负载）

● 速度控制（扭矩取决于负载）

● 位置控制（扭矩取决于负载）

第一种方法最容易实现，可用来控制产生所需的拉力或推力（如缠绕 / 反绕、纺织、薄膜 / 纸张处理等）。对无刷电机而言，力矩控制具有天生的或固有的优越性，常常只控制电流。因此，力矩控制对传感器要求最少（仅需换向器或霍尔传感器），而且非常快（控制带宽大于 300Hz），非常稳定，几乎与负载无关。力矩控制的驱动器只有单纯的放大器，无需校准和调节，因此是最简单的控制器。由于电机摩擦、齿槽效应、爬行和传感器漂移，控制精度不是很高，典型的控制精度在 5-10% 的范围之内。

在快速的现代 NC 或控制板的多轴应用系统中，多轴必须互联（多组电子齿轮和凸轮）、或带自适应控制、或带参数变量，那么简单而有效的方法就是采用力矩控制模式，并将其他控制环并入 NC。这样编码器信号直接到 NC，所有驱动都是平等的、相当稳定的、且无需编程。所有的系统和控制参数（偏移量、PID 值等）都集中在 NC 或控制 PC 机上。

驱动器可以互换，不必编程也不需下载任何参数。到驱动器的控制信息只是简单的力矩差分信号，对偏移量不敏感。编码器直接反馈到 NC 系统，驱动器仅读取换向系统的值。 在多轴系统中，这种简单而有效的方法给多 轴系统带来了非常好的特性，却没有引起高速总线带来的成本和复杂性的问题，这种高 速总线即限制轴的数量有限制速度。另一方面，在需要高分辨率的场合，若还将编码器的信号直接送入 NC 或者 PC 机上进行处理，就非常麻烦。

速度控制是最传统的方法。 他常被集成于一体，这样速度偏差就受制于系统偏移量。在数字驱动中，速度环是由位置环（见下段）衍生来的。

定位或位置控制只能用数字驱动器实现伺服放大驱动。这种方法，稳态位置和速度跟随误差可限制在传感器的几个点，如果传感器具有 4096 脉冲 / 转，则可达到 1/16000 的分辨率。在多轴（电子轴或电子凸轮）同步应用中，不管是在驱动器的内部还是外部，位置环必不可少。

驱动器和电机的大小的确认

在选择好电机和传动方案以后，就必须对电机和驱动器的大小进行确认。对于速度和负载相当稳定，或者其变化周期大于电机（或电子系统）的时间常数的应用场合，这种确认都是很容易的。在这种情况下，只需确认最大负载是否在电机和电子系统允许的限制范围内即可。

对于负载变化周期很快的场合，确认应该按如下步骤进行：

（1）绘制周期的速度 / 时间图，要考虑，如何获取精确的位置和所需速度；还要扣除判断系统速度和加速度门限值所需的时间；而且，稳定时间等于系统控制带宽频率倒数的 2-3 倍。

（2）将系统惯量和负载转换到电机轴上。

（3）计算加速度和惯性扭矩的周期，同时也要检查联轴器，离合器和传动机构的惯量。惯性扭矩 = 加速度 *（电机惯量 + 转换到电机轴 的负载惯量）

（4）将电机轴上的负载加上惯性扭矩，绘制出一个周期内的扭矩 / 时间图。

（5）通过检查扭矩/时间图，可获得扭矩的均方根值。例如：按相同的扭矩，将周期分成时间段 t1，t2.....tn。如果在每个时间段的扭矩值各为 C1，C2，.....Cn。那么周期中扭矩的均方根值就是：

$$Ceff = \sqrt{\frac{C_{1^2} \cdot t_1 + C_{2^2} \cdot t_2 + \cdots\cdots C_{n^2} \cdot t_n}{(t_1 + t_2 + \cdots\cdots + t_n)}}$$

（6）用相同的公式计算周期中（eff 中速度 的均方根值或有效值。

（7）计算在周期中的平均扭矩。

（8）计算在周期中的 tcmax：最大扭矩下的最大执行时间。

（9）计算在最大速度 Cwmax 时所需的扭矩。

（10）计算最大扭矩 Cpk。

所获得的数据还必须与电机和电子限制值进行比较以便进行确认。

电机大小的确认

无刷电机是极好的扭矩传送器，其峰值扭矩比额定值高好几倍。因此，可获得的峰值扭矩通常仅取决于所选用的电子驱动器。 电机尺寸大小的确定要考虑电力和发热两个因素，最佳的电机尺寸是可满足在最差的负载情况下，电机具有正常的温升，一般比环境温度高 40°C -50°C即可。

全面检查电机选择是否适当，可分三个步骤：

- 控制器的峰值或退磁扭矩
- 发热对尺寸的限制
- 电力、或绕组对尺寸的限制

1、退磁电流检查，按下式比较最大电流：

$$I_{pk} = \frac{C_{pk}}{Kt} \cdot \sqrt{2}$$

由于电机的退磁电流会随着温度的降低而增加，这种检查仅对小电机有意义。

2、温升检查，首先，检查 Ceff，（eff 点是否在所选电机的连续操作区间（S1）内。更进一步， 由下列公式推算出电机温升值：

$$\Delta_{mot} = \frac{65}{L_n} \cdot \left[\left(\frac{C_{eff}}{T_n} \right)^2 \cdot L_n + \left(\frac{w_{eff}}{w_n} \right)^2 \cdot L_o \right]$$

其中 Ln 代表电机温度升高 65°C的正常损耗。

如果推算出来的温升值高于电机最大或允许的温升值，那么就必须选择大一号电机。

注意：温度的显著升高通常是选用更大电机的最佳理由。

3、电力大小检查

在最大速度的情况下，电机输出最大扭矩时所需要的电压值必须小于或等于驱动器所能提供的电压。最小的主电源电压是由满足全部给定操作而定的（通常为额定电压的 90%）。如果电子驱动器电源所能提供的最小主电源电压为 Emin，可按下式进行检验：

$$V_{max} = \sqrt{3} \cdot \sqrt{\left(Ke \cdot \frac{W_{pk}}{\sqrt{3}} + \frac{R_w}{2} \cdot \frac{C_{wmax}}{Kt} \right)^2 + \left(\frac{C_{wmax}}{Kt} \cdot \frac{PN}{4} \cdot W_{pk} \cdot L_w \right)^2} \leq E_{min}$$

如果上面的条件不能满足，就需选择带高速绕组的电机，当然也要求更大的驱动电流。

FORREWORD

AC brushless servo drive systems, based on rare earth PM magnets, provide the highest level of dynamic performance and torque density available today. The trend to replace conventional hydraulic, DC, stepper or inverter driven AC drives with brushless drives yields to a new level of system performance, in terms of shorter cycle times, higher productivity, improved accuracy coupled with shorter settling times, increased reliability and longer life. In order to achieve the steep performance improvement which is feasible with the new motors, however, a good understanding of the characteristics of this technology is a prerequisite. In fact, just replacing a conventional motor with a new technology drive on a machine not designed for high speed control could result in unexpected problems and at times even in a deterioration of the machine operability.

These application guidelines were designed to provide a basic tool for the optimization of new applications without prior knowledge of these new drives. For applications where the performance or the motor stress is perceived to be critical, or where a full optimization could be beneficial, contact the Factory.

DRIVE AND MECHANCAL LINKAGE SELECTION

The success of all drive applications dictate a careful selection of the complete system parameters. This in turn is based on a good understanding of the capabilities, which are very high but often not fully understood, of modern brushless drive systems. In fact, brushless drives are not motors, but complete, and complex, control systems; this results in more degrees of design freedom, and more parameters to select, than a conventional drive.

From a conceptual viewpoint, a high performance brushless motor is more similar to the membrane of a loudspeaker than to a standard induction motor. Just as a loudspeaker, the motor has a very short response time, limited inertia, and therefore it faithfully copies the control signal, whatever it may be.Just like a loudspeaker, the quality of the result depends more on the system parameters and drive conditions than on the motor itself.

The design choices facing the system designer are thus at the same time mechanical, electric and electronic, and such choices are interwoven, requiring an interdisciplinary approach.

In particular, all systems require two fundamental selections:

- Mechanical level: choice of the mechanical linkage, of the transmission ratio, of the motion type conversion, of the couplings and clutches;
- Electronic level: Feedback strategy, sensor type and number selection, sensor placement, amplifier type, synchronization and control bus.

The next chapters outline a few guidelines to help with the selection as a function of the application characteristics.

THE BRUSHLESS DRIVE: OPERATIONAL PRINCIPLES, CHARACTERISTICS AND LIMITATIONS

All brushless servo systems consist of an electronic drive, a servo motor, and at least one feedback sensor. All these component operate in a control loop: the drive accepts a reference from the outside world, and feeds current to the motor. The motor is a torquetransducer and applies torque to the load. The load reacts, or accelerates, according to its own characteristics. The sensor measures the load position, enabling the drive to compare the motion with the reference and to change the motor current to force the motion to copy the reference.

As an example, if constant speed is required, the drive would increase the current to the motor until the motor speed equals the reference. If the load is suddenly stepped up, the speed diminishes; the sensor detects the speed change and consequently the drive increases the motor torque to match the increased load and to return to the set speed. From this example, a few deductions are possible:

● The speed accuracy is virtually independent of load and motor, but depends on the quality of the sensor signal and the speed and control algorithm of the drive;

● The time lag between load perturbation and speed correction depends critically on the speed and resolution of the sensor and on the parameters of the electronic drive.

Modern brushless servo drives react to sensor signals with time lags in the order of a millisecond or less, providing for very high loop performance.

At this level, however, the propagation time through the mechanical linkages often becomes the prime limit to the system dynamics.

As an example, consider a system in which a servo motor drives a constant speed, large inertia load through a timing belt. The timing belt has a finite, and significant, elasticity. Analyzing a speed correction at the millisecond timescale, the following sequence is obtained:

1 The drive sets a current level through the motor which applies a torque almost instantly;

2 Initially, while the belt is being stretched, the load does not accelerate as fast as the motor;

3 Consequently, the motor reaches the set speed before the load; the sensor, on the motor, cuts the current and consequently the torque;

4 The increased tension of the belt slows the motor down forcing the drive to increase the current again, and a new cycle is initiated.

In this example, the system is oscillating; the motor torque pulsates and so does the load speed. The end result is noise, overheat and wear, none of which are clearly due to thewould likely disappear, increasing the feeling that the new drives are not adequate.

This simplistic understanding is erroneous. In fact, analyzing the above example:

1 The instability is due to the mismatch betwe- en the system reaction speed (high) and the mechanical propagation or reaction time (long); the motor reacts quicker than the time required by the system to settle through the new torque configuration;

2 The possible solutions are:

either to reduce the mechanical system reaction time, by stiffening the linkage and lowering the inertias, e.g. going direct drive or replacing the belt with a gearbox; or to lower the speed of the control system, giving up some control ban- dwidth which would have been achievable with the new technology.

The second solution, of course, sells away some quality, as it impairs the capability to react quickly to sudden load variations. In fact, older drives, which were anyway slower, compensated the lack of speed with a large motor inertia; on the other side, brushless motors, where inertia is minimized, need a good bandwidth to guarantee good rotation accuracy.

All this explains why brushless drives are rela- tively unforgiving of mechanical inaccuracies, backlash, keyways etc.;

For this reason, the best motors are manufactured with round shaft without keyway, for interference coupling with conical fittings (e.g. Ring-feder) and their shafts and flanges are machined to a reduced toleran- ce to remove the need for flexible couplings. If a coupling is needed, it needs to be torsionally stiff, such as the metallic bellows type.

In conclusion:

While traditional drive systems (DC of PM DC, inverter driven AC) would limit themselves, with their own inertia and response time, the performance of the application, the high level of the new brushless drives move the performance threshold above the mechanical limits of most traditional applications. As a result, the design verification of the mechanical system, and its upgrade to the new requirements, is more important than it used to be up until now. The success of a new application hinges critically on a good dynamical design of the whole system.

The success of a new application hinges criti- cally on a good dynamical design of the whole system.

A few rules can also be derived from the sim- ple examples above:

● The speed accuracy does not depend on the motor but on the sensor;

● The following speed, and therefore the ability to compensate for sudden load variations, depends critically on the stiffness and quality of the mechanical linkage.

The motor noise, which is often observed in poor or retrofit applications, is not due either to the motor or the drive but often enough to a “primeval” mechanical linkage. In fact,noise in due to the motor “hunting” for the correct tor- que; in this situation, the motor is likely to over- heat irrespectively of loading.

The same system might have worked well with an older drive, where the large motor inertia Lrolls overLall imperfections

The dynamic study of the application is funda- mental to the motor selection.

To this aim, this broad concept can be divided in two elements:

● Large signal bandwidth: this is the raw ability to deliver enough torque and speed, in sufficien- tly short time, to force the load on the desired trajectory. This depends exclusively on motor and load torque and inertia, and can be studied considering all components as infinitely stiff;

● Small signal bandwidth or control bandwidth, which relates to the inverse of the settling time. This is necessarily lower than any mechanical resonance frequency in the system; its inverse expresses the settling time of the control loop,i.e. the time required at the end of a motion command to settle in the target position within a required accuracy. Typically, it will be impossible to achieve a settling time better than 2-3 times the damping time of all the oscillations or reso- nances in the load and linkage.

As an example, consider the indexing axis of a high speed notching machine. The rate target is set at 10 strokes per second, i.e. the drive starts and stops the workpiece in a new position ten times per second. If the whole linkage (shaft, reducer, belts, ball screw etc) has a first reso- nance frequency of 50 Hz, the system will settle in about 50-60 msec, leaving only 40 msec for the move and the punch! This application is near impossible, as very high torque and accelera- tions would be needed. However, if the linkage is stiffened, by removing the belt, adopting a lar- ger screw, etc. so that the resonance frequency of the linkage is increased to 100 Hz, the settling time is reduced to 25-30 msec, the time availa- ble for the move is doubled, the required torque is halved, and the application is feasible.

OPTIMAL DRIVE DESIGN: THE TRANSMISSION RATIO, THE TYPE OF CONVERSION, THE COUPLINGS.

The size of brushless motor is determined by its output torque. In all applications, therefore, low motor speed yields to a low specific power and relatively low efficiency. On the other hand, brushless motors have no minimum speed (the speed depends only on the sensor used; there are applications whose axis speed is 1 revolution/ year); as a consequence, a high gearing is advisable only to minimize the motor mass (e.g. with electric traction) or to maximize the efficiency; it is often not advisable from the viewpoint of cost or dynamic performance. Wherever the motor is applied directly on the load, the control bandwidth is maximized because maximum transmission stiffness is achieved; consequently, these applications provide the best position or following accuracy with the shortest settling time.

Before starting with the selection of the right drive for a specific system, it is necessary to know the type of mechanical transmission which can be used. The most common transmissions are the following:

ROTATION-ROTATION CONVERSION

● Timing belt;
● Reducer with helical wheels and parallel axes;
● Cycloid and epicyclic reducer;
● Harmonic Drive™;
● Tangent screw reducer or Gleason gears.

ROTATIONAL-LINEAR MOTION CONVER-SION:

● Timing belts;

● Pinion-rack;
● Metallic band;
● Ball screw.

For any transmission system, the load parameters can be transferred to the motor axis as follows.

If n = transmission ratio (ratio between the motor and the load speed, rad/m in the case of a conversion from linear motion):

● Motor torque = Torque (thrust) to the load/n
● Motor speed = Load speed x n
● Load inertia reduced to the motor axis = iner- tia (or mass) of load/n2

Among all the listed transmissions, the first ones, which are the least expensive, are also the slowest; they result in low control bandwidth (lower than 10 Hz, using a high stiffness belt); for the same reason, it is important to avoid the ratios which make the load inertia transferred to the motor axis too much higher than the motor one. The belt transmission should not be applied for positioning applications with cycle times a lot shorter than one second.

Gear reducers are a good solution, provided that their angular backlash is considerably lower than the accuracy required by the system; the best type of reducer (the most expensive too) is the epicyclic; there are special series of cycloid and epicycloid reducers purpose designed for servo controls, where the angular backlash at the output shaft is limited to 1-3 arc minutes. Such reducers are the only ones that can be specified for applications with control bandwidth higher than 10 Hz. The “servo series” reducers are designed to be coupled directly to the motor with a stiff coupling device, without keyway.

The Harmonic Drive™ gearbox was specifically designed for positioning. It has limited size, high ratio and low backlash. The angular stiffness is not very good and the achievable control bandwidth is in the 10-30 Hz range. Because of its limited efficiency, it should be used for positioning only.

Tangent screw reducers fit in a class apart. These gears, although common and inexpensive, are not suitable for position control. The tangent screw, whose efficiency is based on an effective lubrication, display a low efficiency which drops dramatically at low speed, because below a critical speed the oil film collapses, efficiency drops and a quick wear ensues.

Wherever a rotary to linear conversion is required, ball screws provide a quality solution up to about 4 m/s, especially if they are driven directly by the motor. Direct drive with a low inertia motor generally avoids the need of a torque limiting clutch. For very long movements it is necessary to check the flexure and torsional stiffness of the screw, which may limit the system bandwidth. Longer movements are carried out with rack and pinion, which have always a significant backlash which generally results in limit cycling and motor noise. The traditional backlash elimination methods add stick-slip non linearity instead, and so do friction wheels, typically with similar limit cycling results.

Fast and accurate movements can be obtained with metallic tapes replacing the timing belts with superior stiffness. This technique, while not well known and therefore not standardized, is able to reach excellent performances in the control of small loads (a few kilos).

In general, however, linear motors rest as the best solution for high accuracy control of a linear motion.

In order to select the most suitable reduction method and transmission ratio for a specific application, it is useful to classify first the applications into two broad families:

1 Power services : the motor supplies power to a process (spindles, traction, winding, conve- ying etc.), where the dynamic performance is of marginal importance, the power controlled is significant, the motor cost is an important frac- tion of the system cost;

2 Position control :or high rate cycling (electro- nic camshaft), in which most of the energy is used to accelerate, to brake and to position objects in a short time and with a more or less high accuracy.

Traditionally, the two above mentioned categories are referred to respectively as spindle drives and axis drive.

In the first case, the dynamic properties are often not important, therefore simple speed reducers are acceptable and, as the power is often relevant, a mechanical transmission with a reduction stage is normally useful. In order to choose the best transmission ratio, consider that up to ~ 4000 RPM, the cost and size of the motor decrease in a quasi linear way with the increase of the transmission ratio. On the contrary, the cost of the transmission increases step by step according to the number of gear stages or pulleys; from an application cost viewpoint, the minimum overall cost can only be found in a few points, precisely:

● Either with a direct drive;
● Or at the speed corresponding to the maxi- mum ratio which is possible with just one reduc- tion stage;
● Or at the speed corresponding to the maxi- mum ratio which is possible with two reduction stages and so on.

The economic optimization, in this case, is carried out checking these points and adding the costs of the motor to that of the reducer. For all dynamic applications (axes) the situation is completely different. If the torque required in the drive cycle is dominated by theinertial torques both of the motor and of the load, for an increase in the reduction ratio there is a decrease in the impact of the load inertia and an increase of the impact of the motor inertia. Consequently, for an application where the required torque is exclusively inertial, the reduction ratio at which the load inertia, translated to the motor axis, equals the motor inertia (inertial match) is characterized by the minimum motor torque and therefore by the smallest motor.

For this reason, inertial matching was long considered the best gear ratio selection tool. Such rule, on the contrary, is just a useful indication. In fact, the minimum size motor, considering that the cost of a quality reducer can double the cost of the motor, does not correspond to the lowest cost application sizing. Furthermore, the level of quality and performance is determined a lot more by gear backlash and shaft elasticity than by the motor itself. Consequently, a ratio selection which accounts for the motor only is clearly flawed. A better set of rules is the following;

● Any transmission ratio higher than the inertial ratio is wrong;
● The best ratio is always lower or equal to the inertial one, and it is obtained considering the motor and reducer costs;
● High ratios always yield a narrower control bandwidth and a lower degree of accuracy (with a higher energetic consumption) than what can be obtained with lower ratios.

These considerations explain the current attempt to replace step down gears with direct drives.

Wherever the load inertia transferred to the motor shaft is more than a few times the motor inertia, however, care must be taken, because the motor inertia is not there to carry out a stabilizing action on the possible mechanical resonances or load disturbance on the system. As a consequence, a high control bandwidth needs to be achieved, to compensate electronically what is not obtained by inertia alone; to do this, the mechanical linkage in these applications needs to be of high quality, stiff and without backlash (no keyways!).

From an analytical viewpoint, extreme direct drives mandate a check on the torsional stiffness of the system. The torsional stiffness of the motor shaft needs to be considered as well; this, although minimized in the ULTRACT II design by means of large shafts, is significant for the long and thin motors. In fact, the ULTRACT II range was purposefully overlapped, so that the same torque can be obtained either with a long and narrow motor or with a short and stocky one. For this reason:

● Long motors have a minimum moment of iner- tia; they are intended for high acceleration with low inertia loads;
● Stocky motors have a maximum torsional stiffness; they are intended for high inertia loads, where the motor inertia is small compared to the load.

As a reference, the torsional stiffness of a shaft whose diameter is D and whose length is L, made of steel, is:

$$S_m = \frac{\pi}{32} \cdot \frac{D^4}{L} \cdot 78.5 \cdot 10^9 \cdot \frac{N}{m^2}$$

While the frequency of torsional resonance of a load with inertia JI connected to an axis with torsional stiffness Sm is:

$$F_1 = \frac{1}{(2 \cdot \pi)} \cdot \sqrt{\frac{S_m}{JI}}$$

In all applications with large inertia and short settling time, a check on the first torsiona resonance frequency is highly advisable.

CONTROL STRATEGY SELECTION

All drive system can be configured according to three main control strategies:

- Torque control (the speed depends on the load);
- Speed control (the torque depends on the load);
- Position control (the torque depends on the load)

The first strategy is the easiest to implement and can be used when it is necessary to control a force or a pull (winders/unwinders, textile, tape/paper processing, etc.). Torque control is native, or intrinsic to the brushless motors, which are always current controlled. For this reason, torque control has minimum sensor requirement (just commutation or Hall sensor), is very fast (control bandwidth >300 Hz) and intrinsically stable and robust irrespective of load. Torque controlled drives are simple amplifiers which require no calibration or adjustment whatsoever and are therefore the simplest controllers. Accuracy is not too high due to motor friction, cogging, ripple, sensor drift; typically it can range in the 5-10% area.

In the multi-axes applications with very fast and modern NCs or controller boards, where multiple axes must be linked (multiple electric gears and cams), or with adaptive control or with variable parameters, a simple and effective strategy is to set the drives in torque control mode and to assign the other loops to the NC. In this way the encoders are fed to the NC, all drives are equal, intrinsically stable and need no programming; all the system and control parameters (offsets, PID values, etc) are lumped in the NC or control PC. The drives can be replaced without programming and no download of parameters is necessary. The control signal to the drives is a simple differential torque reference, offset insensitive. The encoders are fed directly to the NC; the drive only reads the commutation system. This simple and elegant approach provides very good performance in multiple systems without incurring the cost and complexity of high speed field buses, which are anyway rather limited in the number of axes and in the achievable speed. On the down side, it downloads on the NC or PC the processing of the encoders, which could be cumbersome where very high resolution is needed.

Speed control is the most traditional strategy. It usually embodies an integration term so that the speed error is limited to the system offsets. In the digital drives, the speed loop is derived from the space loop (see next).

Position or space control in servo amplifiers is carried out only by digital drives (AX-V). In this way, the steady state position and speed following error is limited to a few points of the sensor, that is in the case of an encoder with 4096 pulse/revolutions, 1/16,000 of a revolution. Position loop capability, inside or outside the drive, is necessary to synchronize several axes (electrical axis or electronic cam).

CHECK OF THE DRIVE AND MOTOR SIZING

After selecting the motor and the transmission, a check of the correct sizing of motor and drive is required. Such check is easy for applications where speed and load are quite steady or which vary on a timescale which is long with respect to the time constant of the motor (or of the electronics). In this case, it is only necessary to check for the maximum load to be within the specified limits of the motor and the electronics.

1 Trace the speed/time diagram of the cycle, considering that the acquisition of a precise position or speed requires, apart from the time determined by the limits on the speed and acceleration of the system, also a settling time equal to 2-3 times the inverse of the system control bandwidth;

2 Transfer the inertia and the loads of the system to the motor shaft;

3 Calculate the cycle of the accelerations and the inertial torques [acceleration x (motor inertia + load inertia transferred to the motor shaft)], checking also the inertia of couplings, clutches, transmission devices;

4 Add the load on the motor axis to the inertial torque and derive a torque/time diagram in the cycle;

5 By inspection of the torque vs. time diagram obtain the root mean square value of the torque: e.g. divide the cycle into time segments t1,t2....tn inside of which the torque is constant; if the torque values in each segment of the cycle are respectively C1,C2...Cn, the root mean square torque in the cycle is:

$$\text{Ceff} = \sqrt{\frac{C_1{}^2 \cdot t_1 + C_2{}^2 \cdot t_2 + \cdots + C_n{}^2 \cdot t_n}{(t_1 + t_2 + \cdots + t_n)}}$$

6 Calculate the root mean square or effective speed in the cycle ωeff with the same formula;

7 Calculate the mean torque in the cycle Cave;

8 Calculate the maximum duration time of the maximum torque in the cycle tcmax;

9 Calculate the required torque at the maxi-mum speed Cwmax;

10 Calculate the maximum torque Cpk.

The data thus obtained needs to be compared with the motor and electronic limits to validate the application.

MOTOR SIZE VERIFICATION

Brushless motors are excellent torque transducers, linear to a peak torque several times the nominal. As a consequence, the obtainable peak torque is usually determined only by the choice of the electronic drive. The correct sizing of the motor is thermal and electric; the optimally sized motor is the one which, on the worst load, settles at the correct temperature rise, usually 40-50°C above the room temperature.

The complete check of the selection of the proper motor is carried out in three steps:

- Control of the peak or demagnetizing torque;
- Thermal dimensioning;
- Electric, or winding, dimensioning.

1 Demagnetization current check

Compare the peak current , expressed by:

$$I_{pk} = \frac{C_{pk}}{Kt} \cdot \sqrt{2}$$

With the motor demagnetization current, considering that the motor demagnetization current increases as the temperature decreases. This check is usually meaningful for small motors only.

2 Temperature rise check

Preliminarily, check that the point Ceff, ωeff is within in the continuous operation area (S1) of the chosen motor. More accurately, the temperature rise of the motor can be predicted by:

$$\Delta_{mot} = \frac{65}{L_n} \cdot \left[\left(\frac{C_{eff}}{T_n} \right)^2 \cdot L_n + \left(\frac{w_{eff}}{w_n} \right)^2 \cdot L_o \right]$$

Where Ln represents the nominal losses of the motor with temperature rise of 65°C.

If the predicted temperature rise is higher than the motor maximum or acceptable temperature rise, it is necessary to select a larger motor.

NOTE: the excessive temperature rise is generally the only good reason for the use of a larger motor.

3 Electric sizing check

At the maximum speed, the voltage required by the motor to supply the required torque must be lower or equal to what is available from the drive, for the minimum mains supply voltage which is specified for full specification operation (usually 90% of the nominal voltage).

If Emin is the voltage value which can be supplied by the electronic power supply at the minimum supply voltage, it is necessary to check that:

$$V_{max} = \sqrt{3} \cdot \sqrt{\left(Ke \cdot \frac{w_{pk}}{\sqrt{3}} + \frac{R_w}{2} \cdot \frac{C_{wmax}}{Kt} \right)^2 + \left(\frac{C_{wmax}}{Kt} \cdot \frac{PN}{4} \cdot W_{pk} \cdot L_w \right)^2} \leq E_{min}$$

If this condition is not verified, it is necessary to choose a motor with a higher speed winding; this will of course also require a higher drive current.

Conformity Declaration
规范说明

符合 EC1.8.1.96 低压规范的声明	DECLARATION OF CONFORMITY TO THE LOW VOLTAGE DIRECTIVE
符合 EC 认证的操作说明 CE 符合低压规范标志 回收利用：ULTRACT III 所有产品所用的一切包装材料均可回收利用	Operating instructions in compliance with EC directives Declaration of conformity to the Low Voltage Directive Recycling: all packages and packing tapes used in the ULTRACT III packing are recyclable
EC 规范	GENERAL: THE EC DIRECTIVES
EC 规范由欧洲共同体发布在欧共体国家内实施，对公开技术需 求和认证进行确认。该规范还需遵守各成员国的国家法律。一旦在 任一成员国取得认证，在任何欧共体国家均可通用。 通过认证的产品或器件均需标明 CE 标志。在变频驱动或 PDS 系统 中，电机只是其中的部件，因此只按部件通过由 93/68/CEE 修正的 73/23/CEE 低压认证。ULTRACT III 系列电机上的 CE 标志就是指已通过 LVD 认证。 对 EMCD 认证来说，一般需要在系统级而非部件级符合规范。为了 帮助用户符合 EMD 规范，ULTRACT II 系列电机在出厂前已通过符合 CE 规范的典型驱动器 -AX-V 系列控制器的组合测试。详细说明可参阅 AX-V 的随机所带文件。	The EC Directives are issued by the European Council and are intended for the determination of common technical requirements and certification proce- dures within the European Community. The Directives establish guidelines that are or will be converted in national laws in the member states. The cer- tification issued in any state member guarantees free access in all the European Community without further testing. The conformity of a product or component is certified by the CE marking on the product. In the case of variable speed drives, or PDS, motors are consi- dered components; the only directive which applies to components is the Low Voltage Directive 73/23/CEE amended by 93/68/CEE. The CE mark on the Ultract motors is referred to compliance to the LVD. As for the EMCD, compliance is required at system level and not at compo-nent level, as EMI emission depends critically on system composition and wiring. In order to help the user to comply with the EMD directive, the Ultract motors have been tested and compliance was verified in a ìCE verified typi- cal system, driven by a AX4 series drive. The system is described in the AX4 product documentation,
低压规范	THE LOW VOLTAGE DIRECTIVE
LVD 规范是在正常环境条件下，所有电力部件均可在交流 50-1000V 或直流 75-1500V 电压之间操作。爆炸气体或载人电梯除外。 LVD 认证的目的是只有确保对人身安全或指定材料无危害的电子设备才允许销售。	The LVD applies to all electrical components operating between 50 and 1000 Vac or 75 to 1500 V DC in under normal ambient conditions. Explosive atmospheres or passenger lifts are excepted. The objective of the low voltage directive is to ensure that only that electrical equipment that does not endanger the safety of humans or the preservation of material assets is marketed.
安全信息	SAFETY INFORMATION
本设备的运输、安装和操作必须有训练有素的合格人员完成（参见 IEC364）。 在安全盖板打开的情况下，进行不良安装可引起人身或材料损坏。电机在运行过程中，即使是在主电源断开之后，也有可能带电、发烫以及内部回转体旋转。 电机内装有极强的永磁材料，转子在无安全保护措施的前提下，千万不能拆卸。	Only qualified personnel are permitted to transport, install or operate the units (IEC 60364). A defective installation or operation of the units with safety covers open may lead to personal or material danger;The motors may have live, hot and rotating parts inside during operation, even after the mains voltage has been disconnected The motors use strong permanent magnets; the rotor should never be remo-ved without proper safety precautions.
应用指导	APPLICATION AS DIRECTED
ULTRACT III 系列伺服电机用于给工业装备提供动力。只有确 认装备符合 89/336/CEE EMC 规范和 98/37/CEE 机械规范的前提下，完整的驱动系统方可使用。 电机符合 73/23/CEE LVD 规范。铭牌和产品说明书中的技术参数必须认真检查。	The Ultract III ervomotors are intended for the powering of industrial equip- ment. The entire drive systems may only be commissioned after compliance with the EMC directive 89/336/CEE and the machinery directive 98/37/CEE has been verified. The motors are conformal to LVD 73/23/CEE. The technical data stated in the nameplate and in the product documenta- tion must be observed.

安装	INSTALLATION
本产品的安装和冷却均应符合相关文件的规定。 确保电机在运输过程中无损坏，以免影响使用者安全。 本产品在运行中应遵循有关防止事故发生的国家法规。电气安装时，必须符合有关规范（如电缆截面积、熔断丝等保护措施）。使用 常规保护装置时务必注意，大多数驱动器均带有一个内置式主整流器，其最大电势时所产生的 DC 峰值电流，有可能会使常规保护装置失效。因此，对保护装置的抗 DC 故障电流特性要倍加小心。另外，大多数驱动器内部的 EMC 滤波器可对地产生峰值电流，在选择保护装置时，也应考虑。 注意，无论电机是否带有 CE 标志，设备或机械的制造商都应遵守 EMC 规范。并向用户推荐接线和滤波等规范说明，而且说明应与带 CE 标志的产品一样，可在产品随机文件中找到或由制造商另行提供。 EC 认证说明：本声明适合 72/23/CEE 低压规范的 EC 认证。 菲仕公司在 Ultract 无刷电机系列产品的设计、制造和测试中，完全符合 72/23/CEE 低压规范。	The units must be installed and cooled according to the product documen- tation.Ensure that the motors were not damaged during transport so as to impair user safety.When the unit is operated, the valid national regulations for the prevention of accidents must be observed.The electrical installation must comply with the applicable regulations (cable sections, fuses, protections).When using current operated protective devices, please note that most drive are equipped with an internal mains rectifier, which can lead to a potential DC leakage current, which may impair the correct operation of some current operated protective device. Protective devices which are insensitive to DC fault currents must be specified. Additionally, EMC filters inside most drive create a leakage current to ground which must be considered while selecting the protective devices. The opportune value inductances * 1 mH have to be applied when welding cables between driving and motor have length superior than 20 meters. Please note that, irrespective of the CE marking on the motors, the confor- mity of the drive system to the EMC directive is the responsibility of the manufacturer of the system or machine. Useful recommendations on wiring and filtering, along with a CE compliance typical system, are described in the product documentation or can be obtained by the manufacturer. EC EX “conformità EC” Declaration of Conformityfor the purpose of the EC Low Voltage Directive 73/23/CEE. The ULTRACT brushless servo motor series were designed, manufactured and tested in conformity to the EC Low Voltage Directive 73/23/CEE under the sole responsibility of:Ningbo Physis Technology Co., Ltd.
适用标准： IEC 72/1, 34/1, 34/5, 34/11 EN 60034-1 + VAR A1 + VAR A2 EN 60529 EN 50262 CEE 73/23	The considered standards are: IEC 72/1, 34/1, 34/5, 34/11 EN 60034-1 + VAR A1 + VAR A2 EN 60529 EN 50262 CEE 73/23

Contact Information
联系我们

菲仕总部 PHYSIS HEADQUARTER

宁波菲仕技术股份有限公司
Ningbo Physis Technology Co., Ltd.
浙江省宁波市北仑区小港安居路 308 号
No.308, Xiaogang Anju Road, Beilun District, Ningbo, China
总台热线 /Tel：+0086-(0)574-26922600

市场销售 Marketing & Sales

销售热线 /Tel：+0086-(0)574-23459197
邮箱 /E-mail：Sales@physis.com.cn

售后服务 After Sales

服务热线 /Tel：+0086-(0)574-23459183
邮箱 /E-mail：Aftersales@physis.com.cn

由于产品的不断更新和改进，本产品型录中的部分产品数据信息会产生变化，为了能提供更好的服务，建议您在查阅本产品型录的同时，请联系我们，以便您及时获得最新的资讯。

All technical data,drawings and product information contained here may be subject to change, in order to provide you with a continuously improved products, please contact with us for up to date information.

扫一扫了解更多

版本编号：PHULSM2209-V06